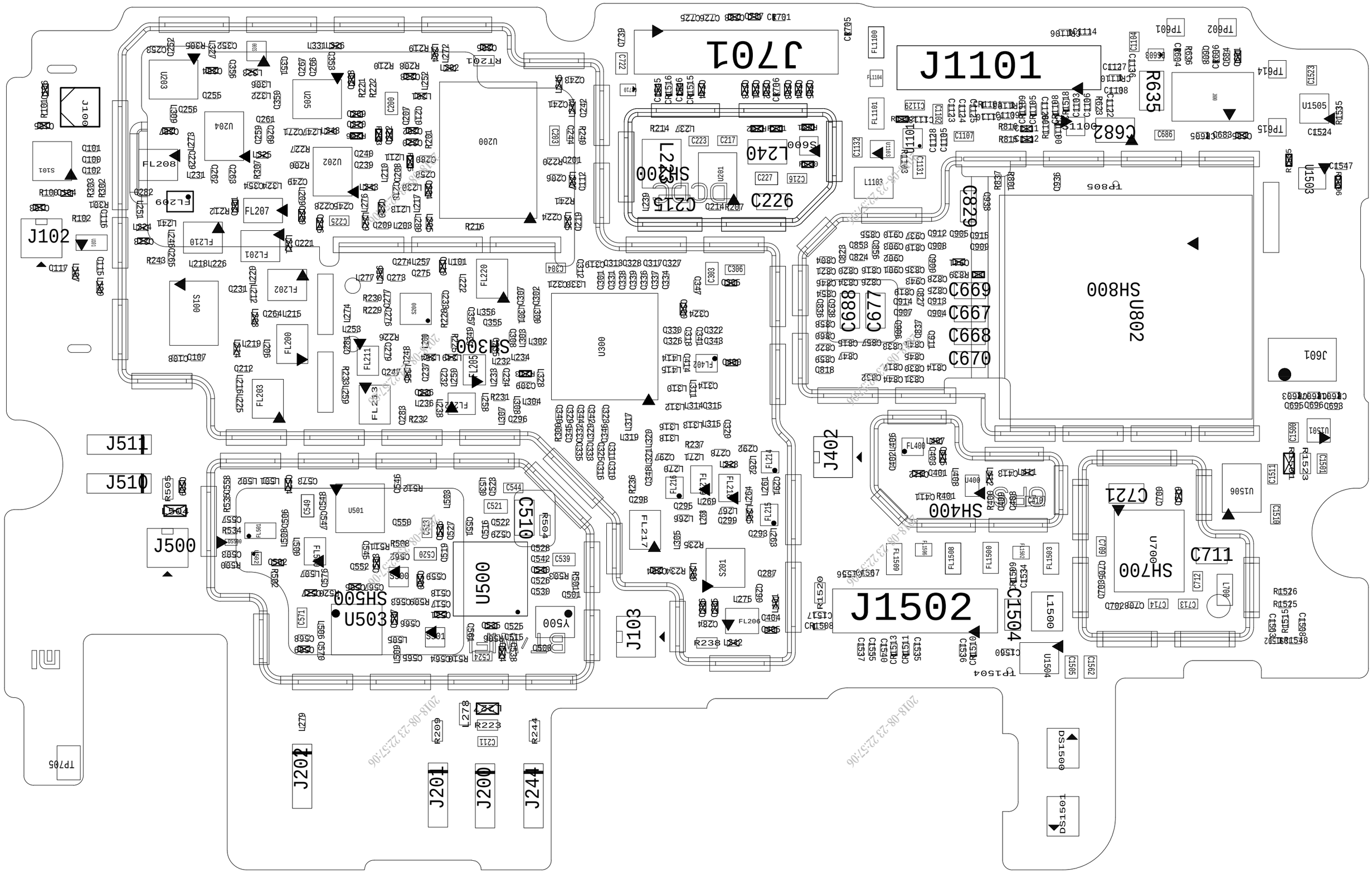
J701
J1101
R635
C682
U1505
U1503
C1547
J102
J100
S101
FL208
FL209
FL207
FL210
FL201
FL202
FL200
FL203
FL213
FL211
FL205
FL220
FL217
FL216
FL214
FL206
FL400
FL1509
FL1508
FL1500
FL1503
FL1504
U200
U202
U204
U205
U203
U300
U400
U501
U500
U503
U700
U802
U1504
U1506
U1501
S100
S201
S300
S400
S500
S600
S200
SH200
SH300
SH400
SH500
SH700
SH800
C215
C226
L240
C829
C669
C667
C668
C670
C688
C677
C510
C721
C711
C1504
J402
J1502
J601
J511
J510
J500
J103
J201
J200
J244
J202
TP705
DS1500
DS1501

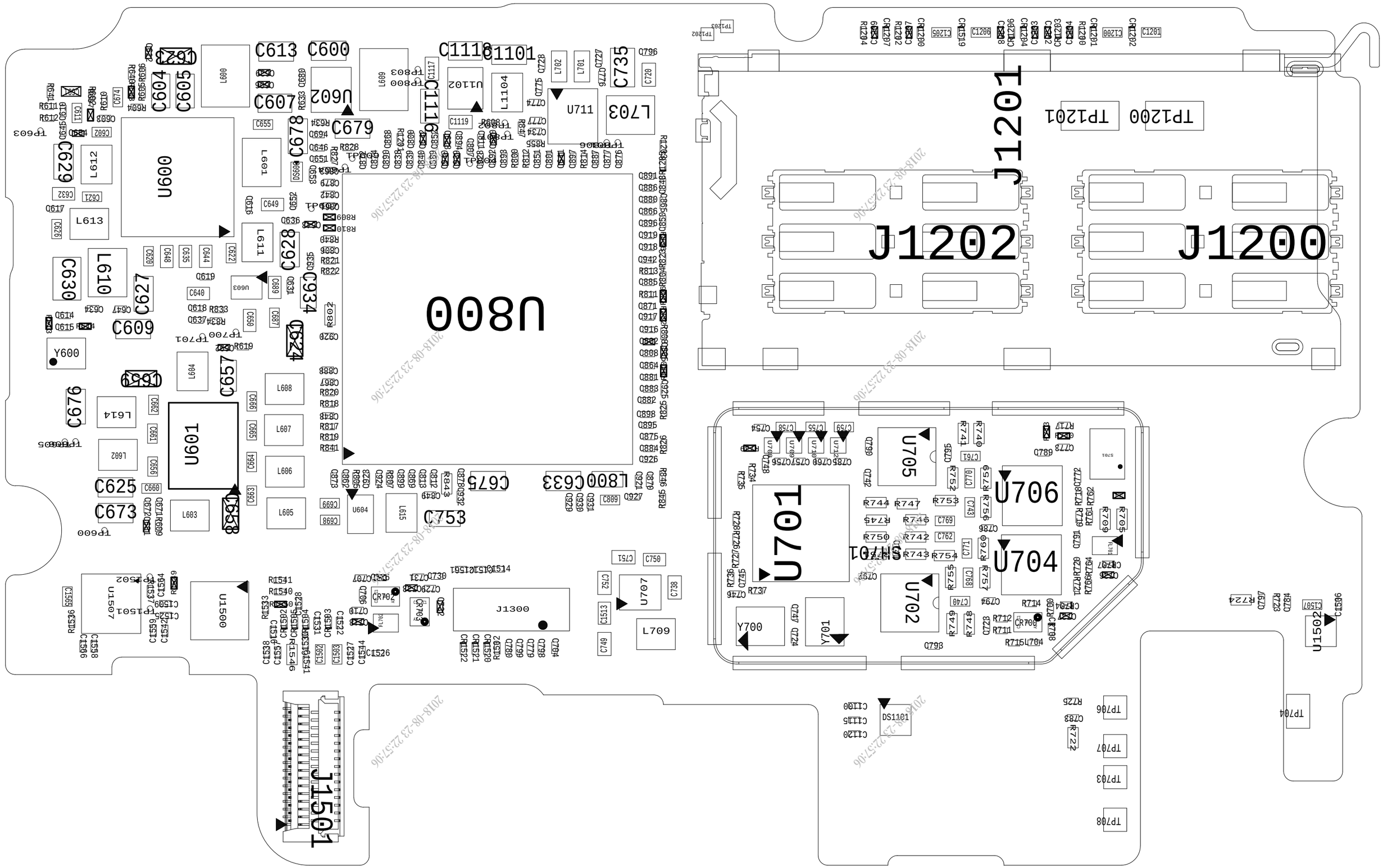
U800
U600
U601
U701
U705
U706
U704
U702
U707
U1500
U1501
U1502
J1201
J1202
J1200
J1300
J1501
TP1200
TP1201
TP704
TP706
TP707
TP703
TP708
DS1101
Y700
Y701
L709
C613
C600
C1118
C1101
C735
L703
C678
C679
C628
C934
C630
C627
C609
C657
C676
C625
C673
C675
C633
C753
C1116
C1111
C1502
2018-08-23 22:57:06

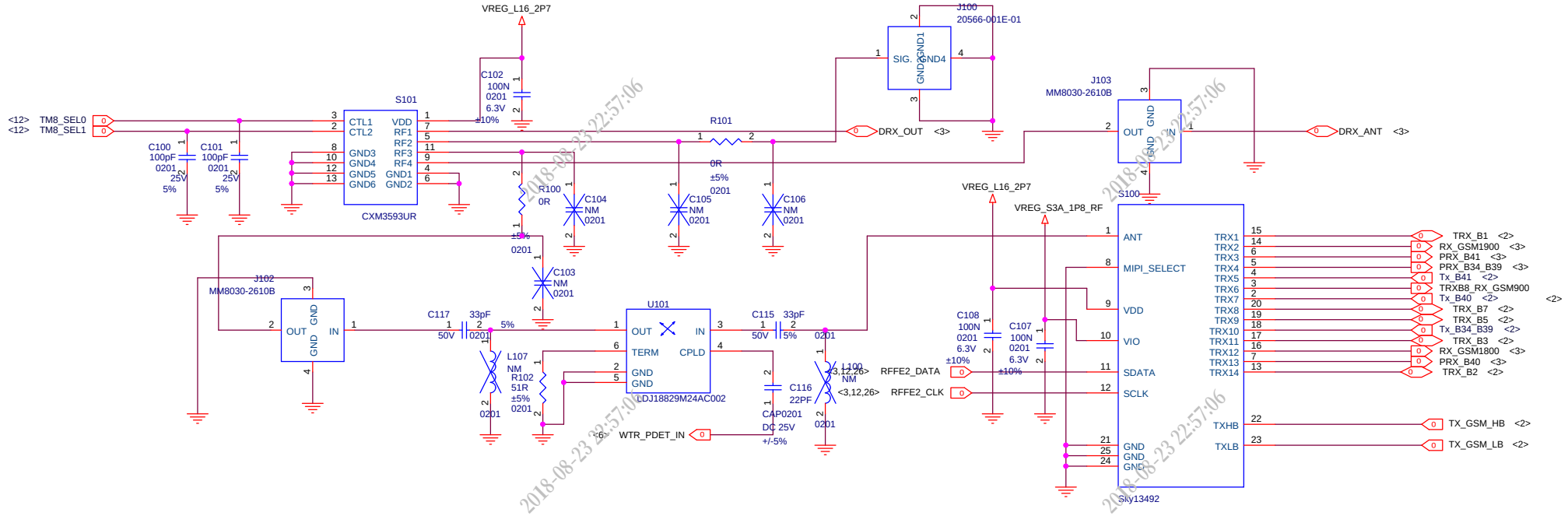

PRIMARY SWITCH(SP16T) LOGIC

Antenna Path	Bit[7]	Bit[6]	Bit[5]	Bit[4]	Bit[3]	Bit[2]	Bit[1]	Bit[0]
Sleep mode (standby)	X	0	0	0	0	0	0	0
2G transmit low band	X	0	0	0	1	0	1	0
2G transmit high band	X	0	0	0	1	0	0	0
TRX1	X	0	0	0	0	1	0	0
TRX2	X	0	0	0	0	1	0	1
TRX3	X	0	0	0	0	1	1	0
TRX4	X	0	0	0	0	1	1	1
TRX5	X	0	0	0	1	0	0	1
TRX6	X	0	0	0	1	0	1	1
TRX7	X	0	0	0	1	1	0	0
TRX8	X	0	0	0	0	0	0	1
TRX9	X	0	0	0	0	0	1	0
TRX10	X	0	0	0	0	0	1	1
TRX11	X	0	0	0	1	1	0	1
TRX12	X	0	0	0	1	1	1	0
TRX13	X	0	0	1	0	0	0	0
TRX14	X	0	0	1	0	0	0	1
Isolation mode (warm–up)	X	1	1	1	1	1	1	1

CXM3593

CTL 1	CTL 2	Active path
L	H	RF1-RF4 RF2-RF3
H	L	RF1-RF3 RF2-RF4

Primary Ant Connector, Coupler and Primary Switchplexer

Title: X5		
Size: A3	Document Number: <Doc>	Rev: P0
Date: Wednesday, April 08, 2015	Sheet 1 of 32	

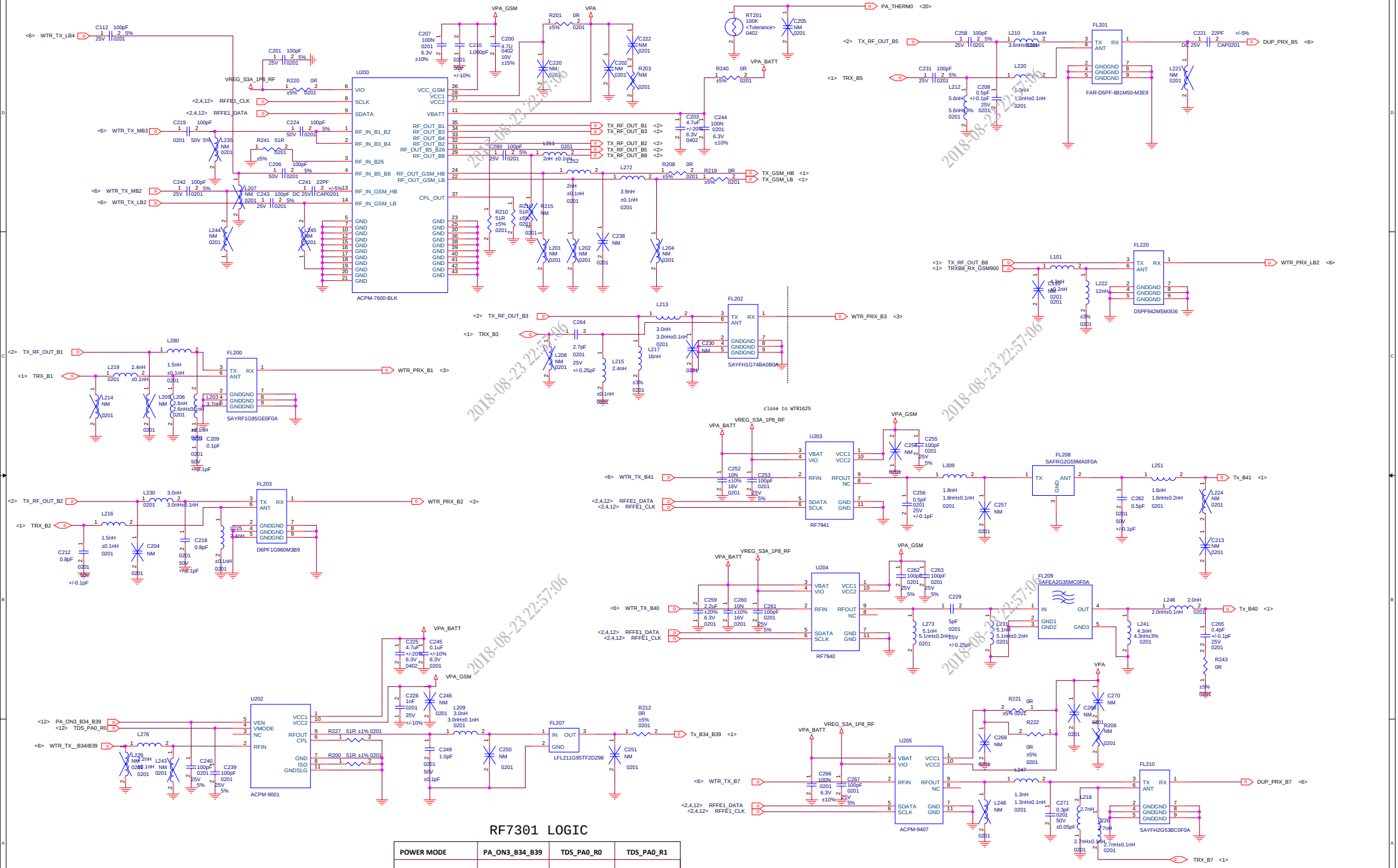

RF7301 LOGIC

POWER MODE	PA_ON3_B34_B39	TDS_PA0_R0	TDS_PA0_R1
POWER DOWN MODE	L	L	L
STANDBY MODE	L	X	X
HIGH POWER STATE	H	L	L
MEDIUM POWER STATE	H	H	L
LOW POWER STATE	H	H	H

Title	X5		
Size A2	Document Number <Doc>		Rev P0
Date: Wednesday, April 08, 2015	Sheet 2 of 32		

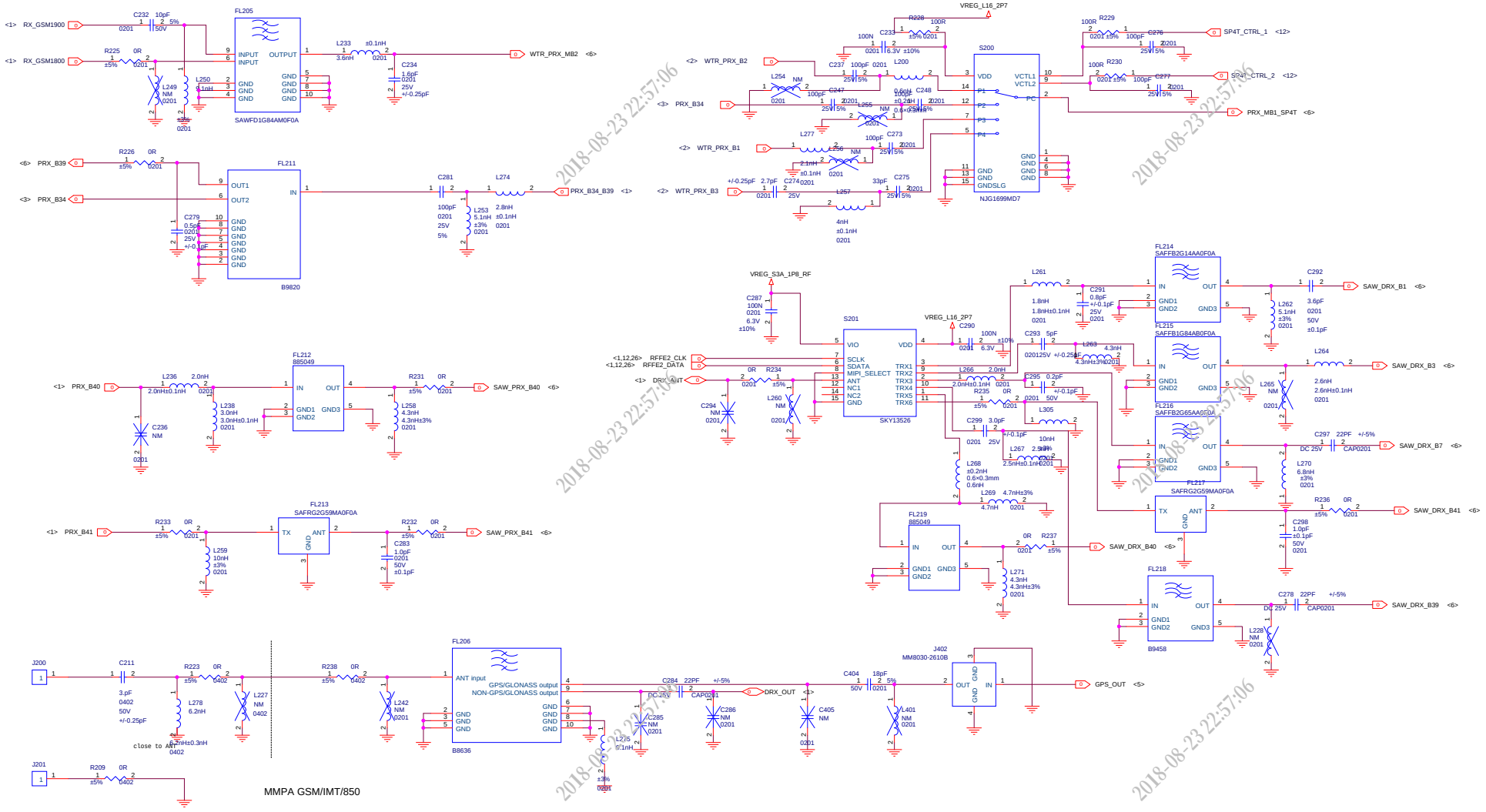

PRx and Drx	SP4T_CTRL_1	SP4T_CTRL_2
B2	H	L
B34	L	L
B1	L	H
B3	H	H

2018-08-23 22:57:06

Title	X5	
Size A2	Document Number <Doc>	Rev P0
Date: Wednesday, April 08, 2015	Sheet 3 of 32	

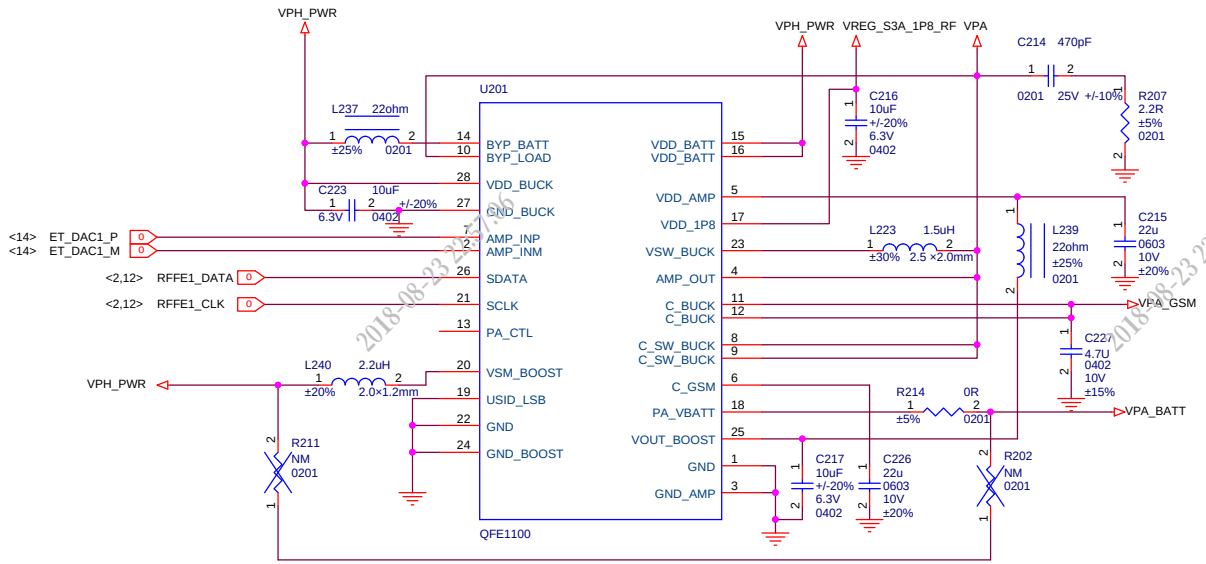

2018-08-23 22:57:06

QFE1100

Title	X5	
Size A3	Document Number <Doc>	Rev P0
Date: Wednesday, April 08, 2015	Sheet 4 of 32	

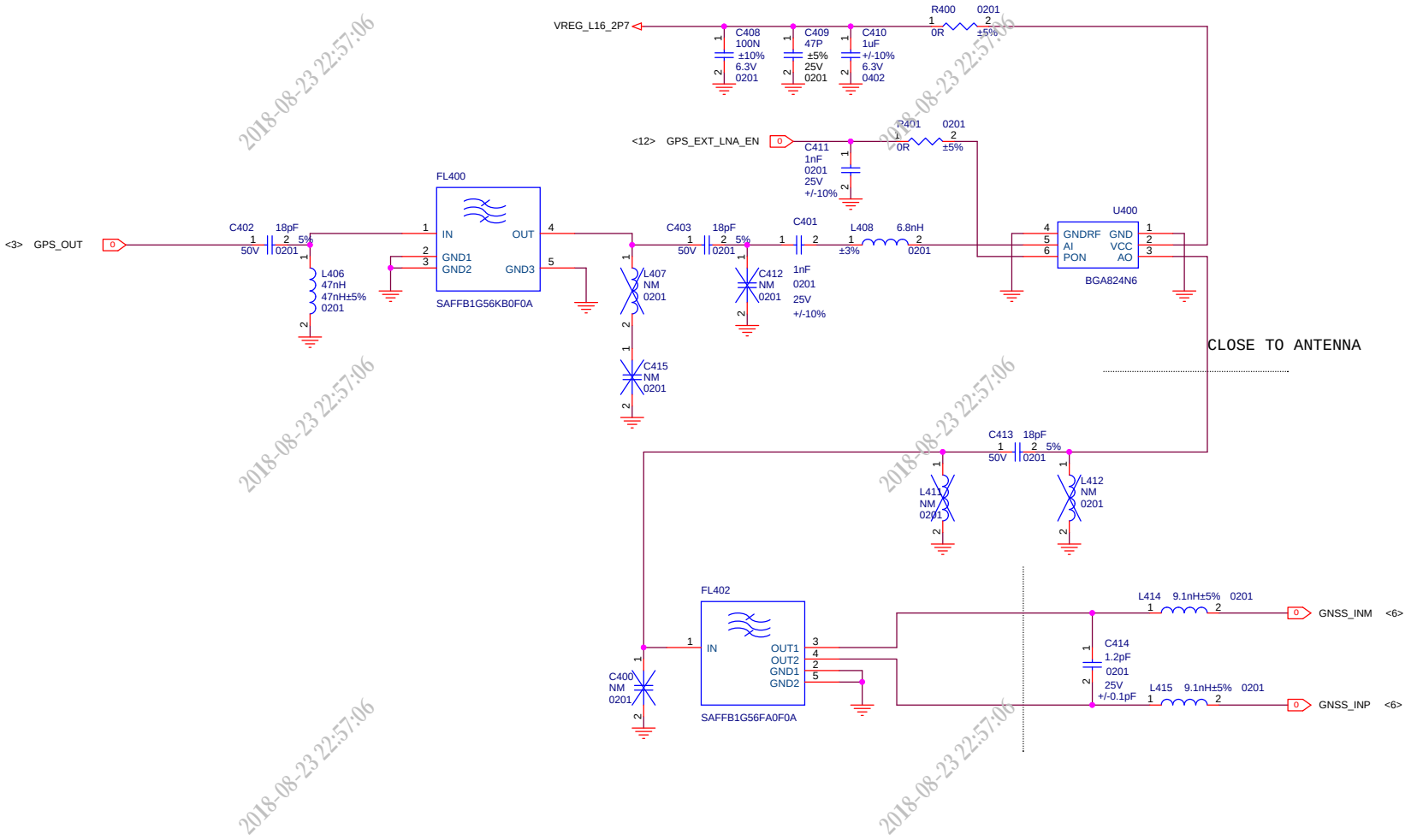

GPS

Title	X5	
Size A3	Document Number <Doc>	Rev P0
Date: Wednesday, April 08, 2015	Sheet 5 of 32	

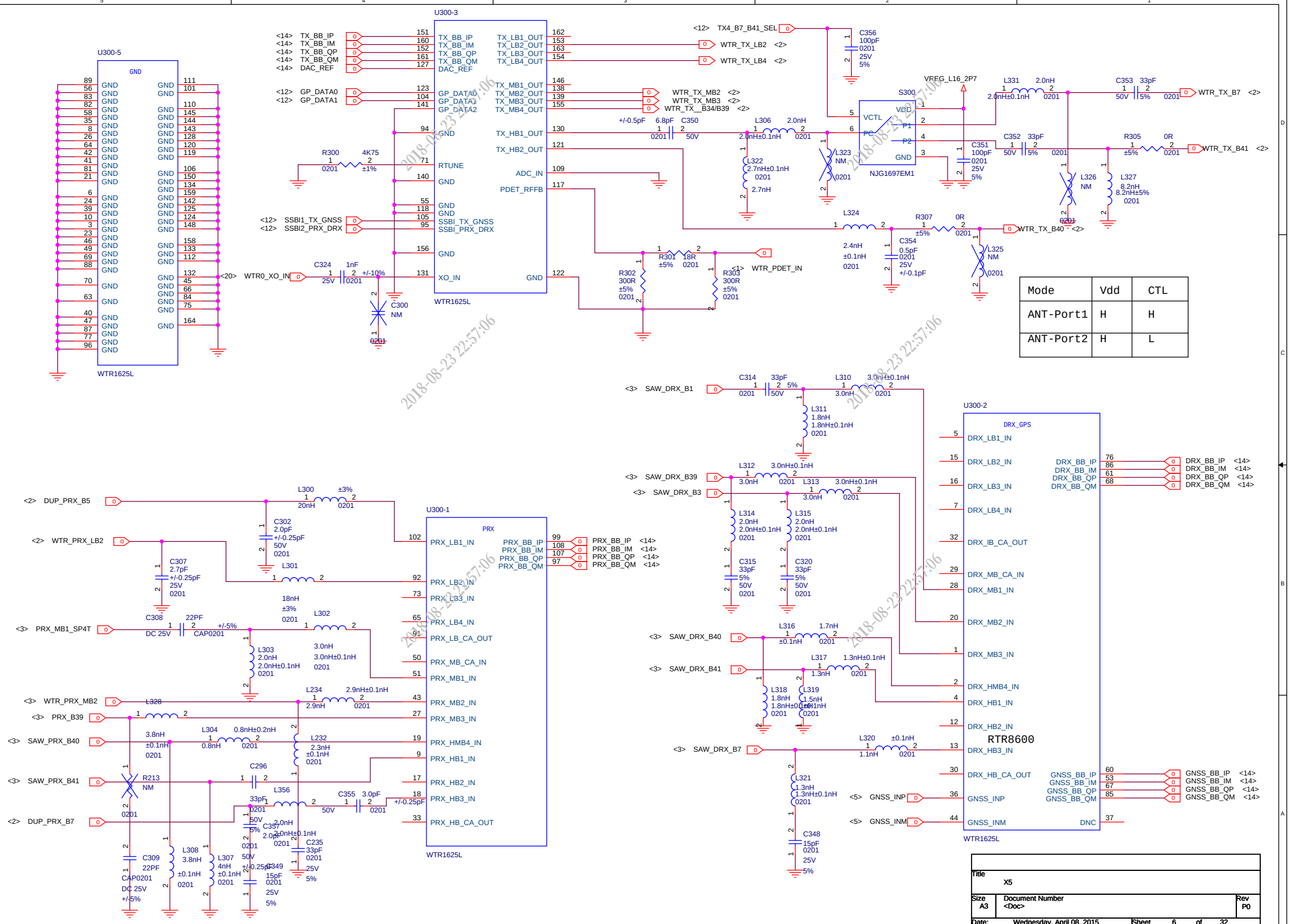

Mode	Vdd	CTL
ANT-Port1	H	H
ANT-Port2	H	L

Title	X5	
Size A3	Document Number <Doc>	Rev P0
Date: Wednesday, April 08, 2015	Sheet 6 of 32	

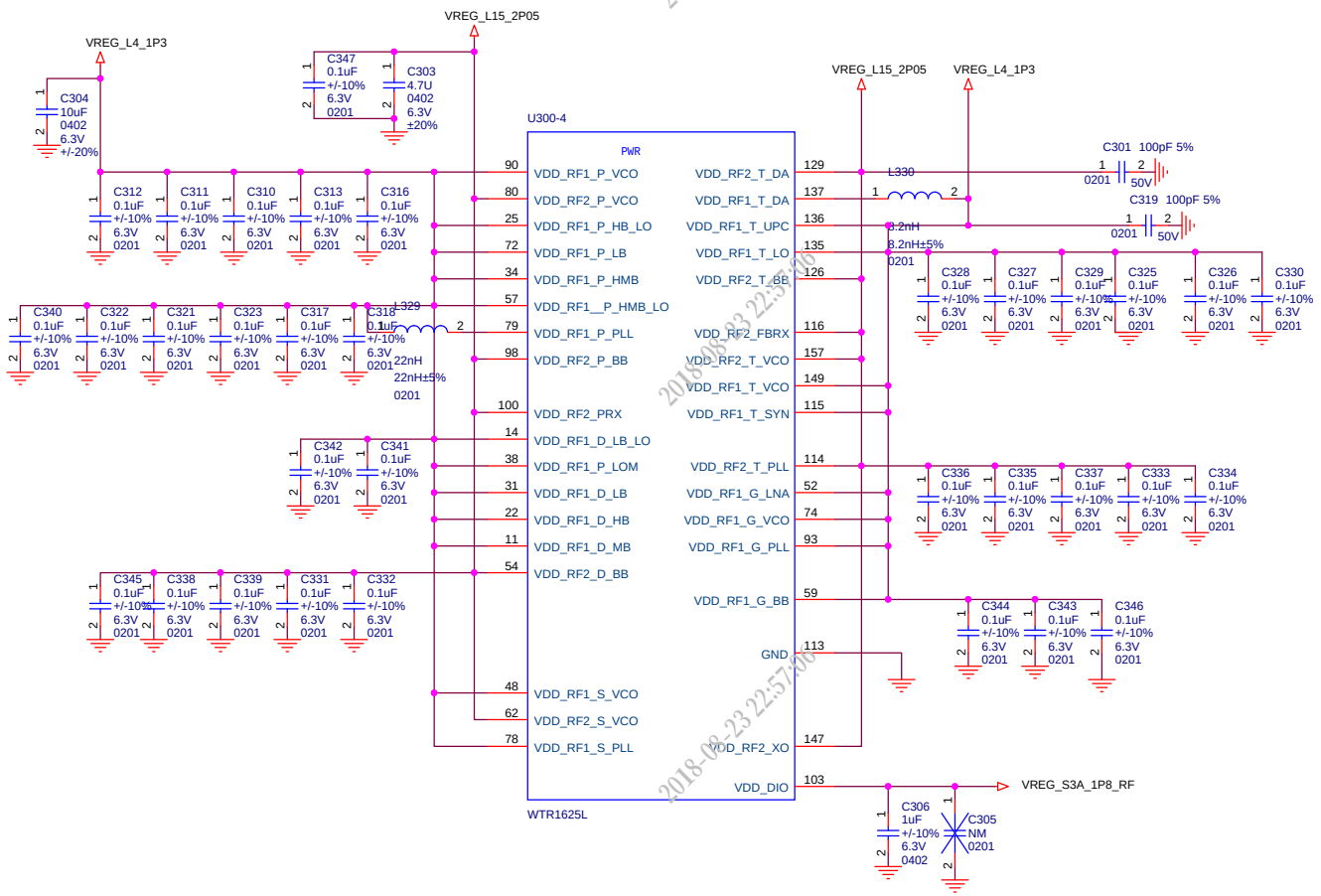

GROUP	NAME	PIN	NET
1	VDD_RF2_D_BB	54	VREG_L15_2P05
2	VDD_RF2_T_DA	129	
3	VDD_RF2_P_BB VDD_RF2_T_BB	98 126	
4	VDD_RF2_P_VCO VDD_RF2_S_VCO VDD_RF2_T_VCO	80 62 157	
5	VDD_RF2_T_PLL	114	
6	VDD_RF2_XO	147	
7	VDD_RF2_FBRX	116	
8	VDD_RF2_PRX	100	
9	VDD_RF1_P_PLL VDD_RF1_S_PLL VDD_RF1_S_VCO VDD_RF1_P_VCO	79 78 48 90	VREG_L4_1P3
10	VDD_RF1_T_DA	137	
11	VDD_RF1_T_VCO VDD_RF1_T_SYN	149 115	
12	VDD_RF1_T_LO VDD_RF1_T_UPC	135 136	
13	VDD_RF1_P_HB_LO	25	
14	VDD_RF1_D_LB	31	
15	VDD_RF1_P_LB	72	
16	VDD_RF1_D_LOM	38	
17	VDD_RF1_D_LB_LO	14	
18	VDD_RF1_D_MB	11	
19	VDD_RF1_D_HB	22	
20	VDD_RF1_P_HMB_LO	57	
21	VDD_RF1_P_HMB	34	
22	VDD_RF1_G_LNA VDD_RF1_G_BB	52 59	
23	VDD_RF1_G_PLL VDD_RF1_G_VCO	93 74	
24	VDD_DIO	103	VREG_S3A_1P8_RF

RTR8600 BYPASS

Title	X5	
Size A3	Document Number <Doc>	Rev P0
Date: Wednesday, April 08, 2015	Sheet 7 of 32	

2018-08-23 22:57:06

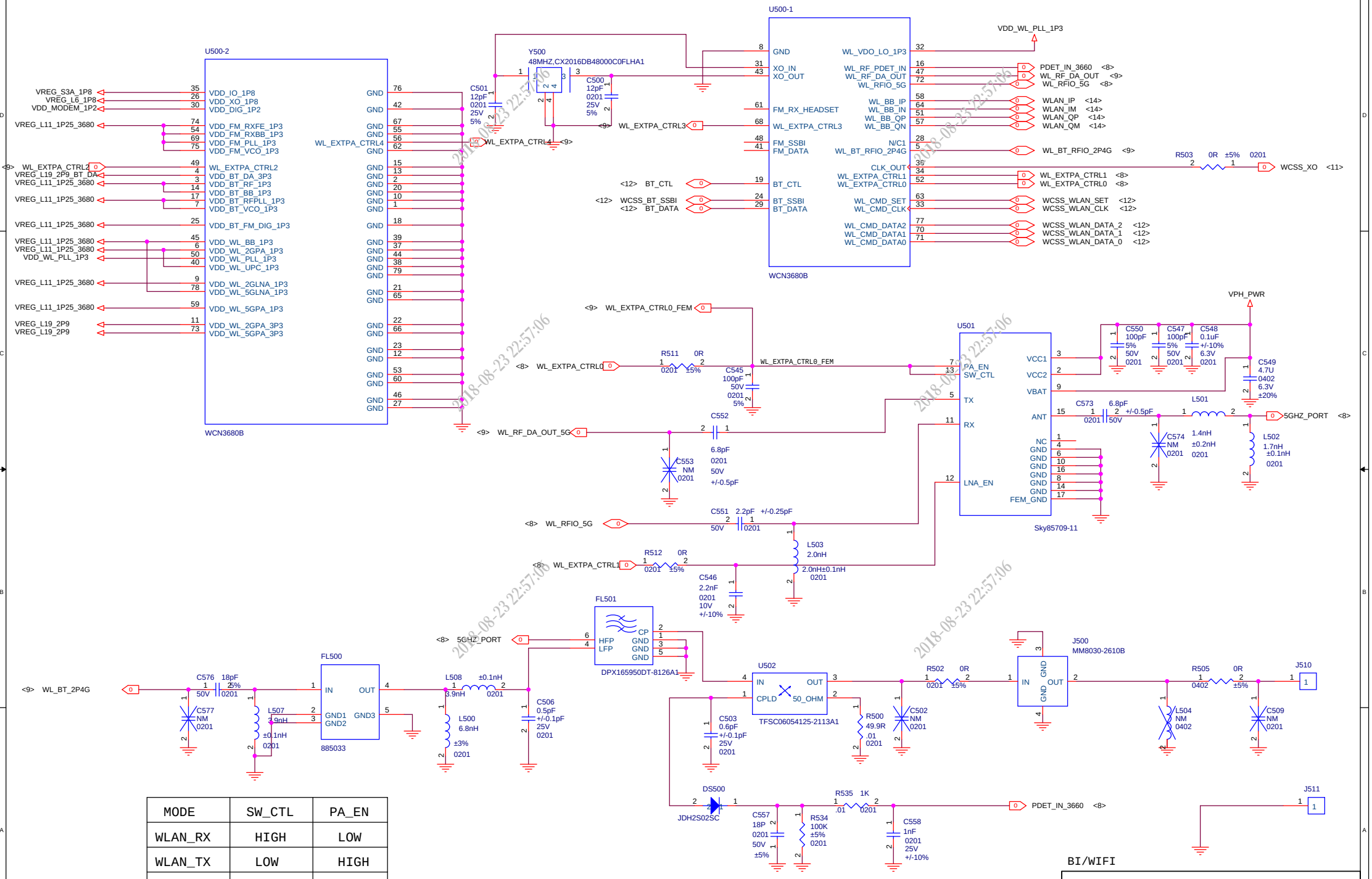

MODE	SW_CTL	PA_EN
WLAN_RX	HIGH	LOW
WLAN_TX	LOW	HIGH
WLAN_OFF	LOW	LOW

BI/WIFI

Title	X5
Size A3	Document Number <Doc>
Rev	P0
Date:	Wednesday, April 08, 2015
Sheet	8 of 32

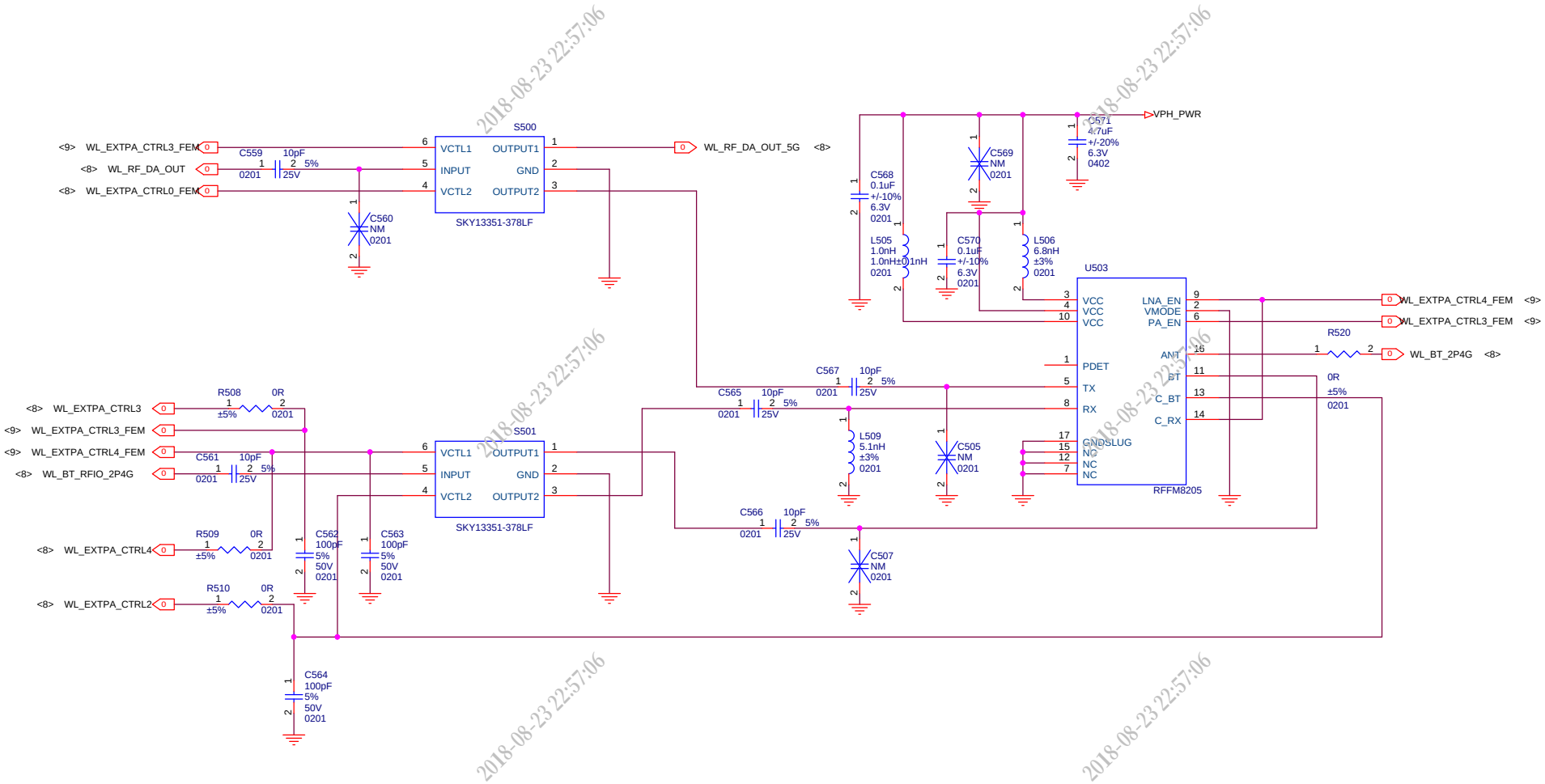

2018-08-23 22:57:06

Title	X5	
Size A3	Document Number <Doc>	Rev <RevCode>
Date: Wednesday, April 08, 2015	Sheet 9 of 32	

Voltage	Pad name	Pad no.	Max curre
1P3	VDD_BT_FM_DIG_1P3	25	1
	VDD_BT_BB_1P3	14	1
	VDD_BT_PLL_1P3	17	8
	VDD_BT_RXRF_1P3	3	10
	VDD_BT_VCO_1P3	7	8
	VDD_FM_PLL_1P3	69	16
	VDD_FM_RXBB_1P3	54	
	VDD_FM_RXFE_1P3	74	
	VDD_FM_VCO_1P3	75	
	VDD_WL_2GLNA_1P3	9	10
	VDD_WL_2GPA_1P3	6	85
	VDD_WL_5GLNA_1P3	78	
	VDD_WL_5GPA_1P3	59	155
	VDD_WL_BB_1P3	45	10
	VDD_WL_LO_1P3	32	8
	VDD_WL_PLL_1P3	50	10
	VDD_WL_UPC_1P3	40	30
1P8	VDD_XO_1P8	26	2
	VDD_IO_1P8	35	1
3P0	VDD_FM_TXDA_3P0	49	16
	VDD_WL_2GPA_3P0	11	560
	VDD_WL_5GPA_3P0	73	600
	VDD_BT_TXRF_3P0	4	45
1P2	VDD_DIG_1P2	30	4

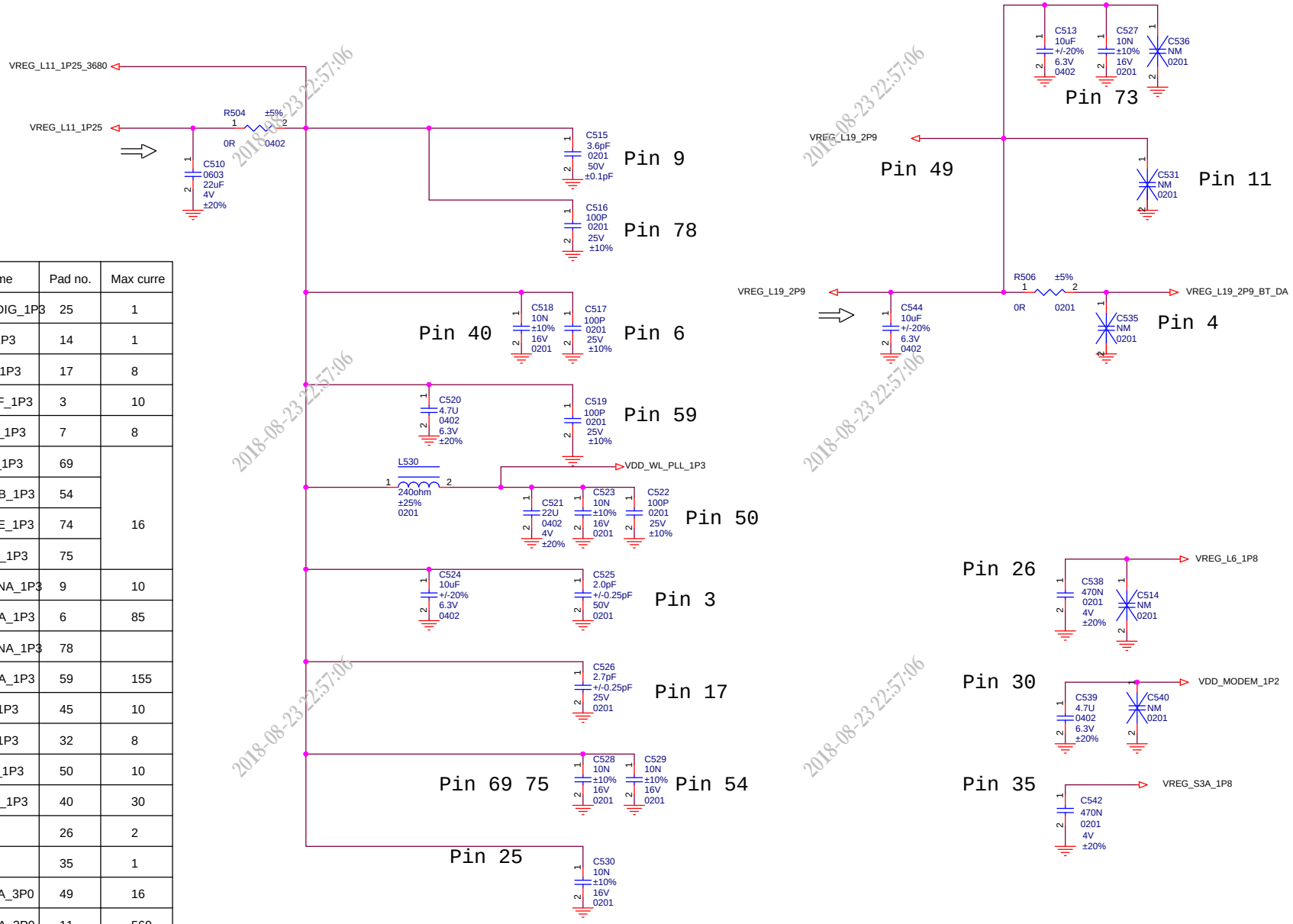

BT/FM/WLAN DECOUP

Title	X5	
Size A3	Document Number <Doc>	Rev P0
Date: Wednesday, April 08, 2015	Sheet 10 of 32	

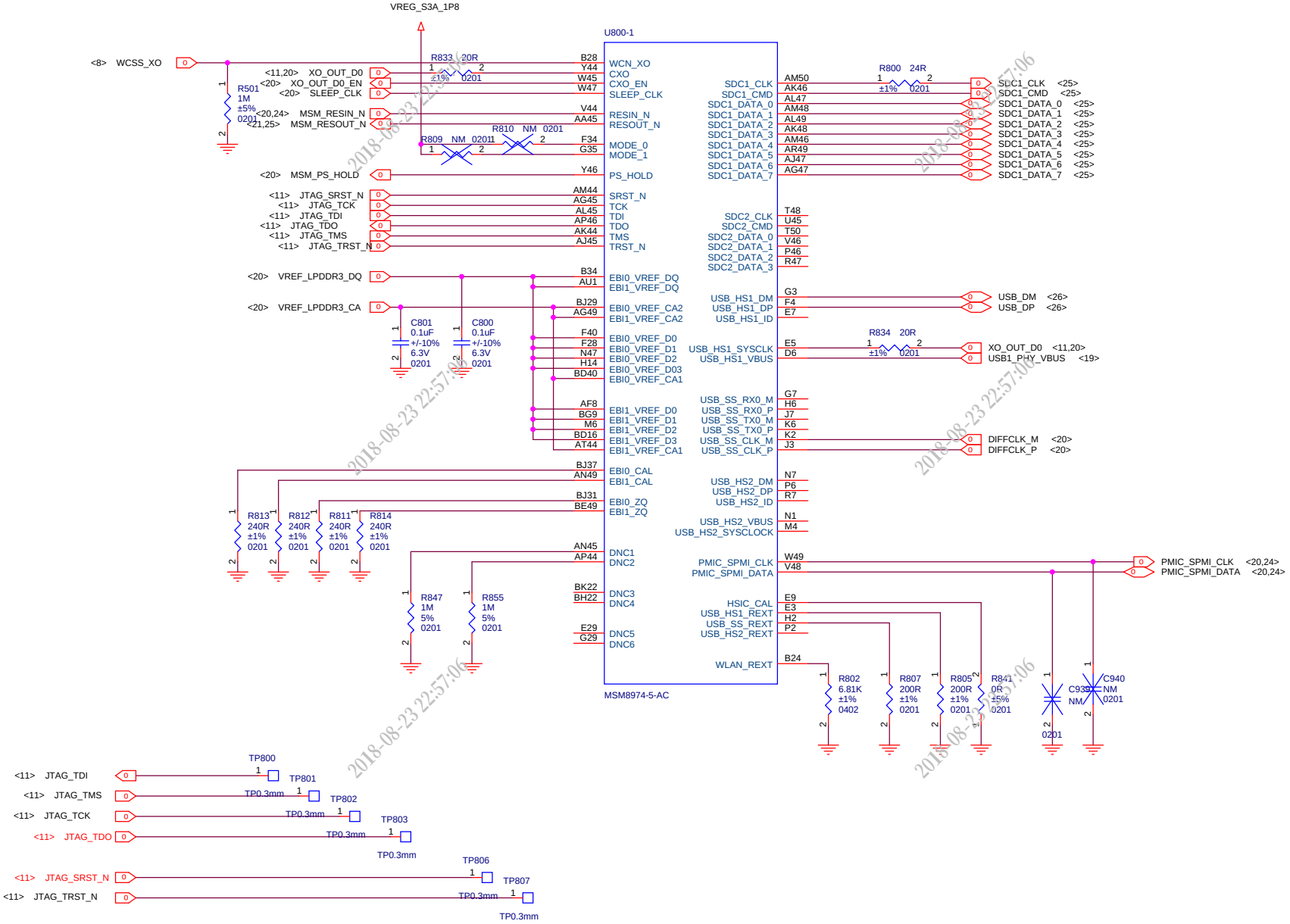

MSM8974 (1 OF 8) - CONTROL

Title	X5	
Size A3	Document Number <Doc>	Rev P0
Date: Wednesday, April 08, 2015	Sheet 11 of 32	

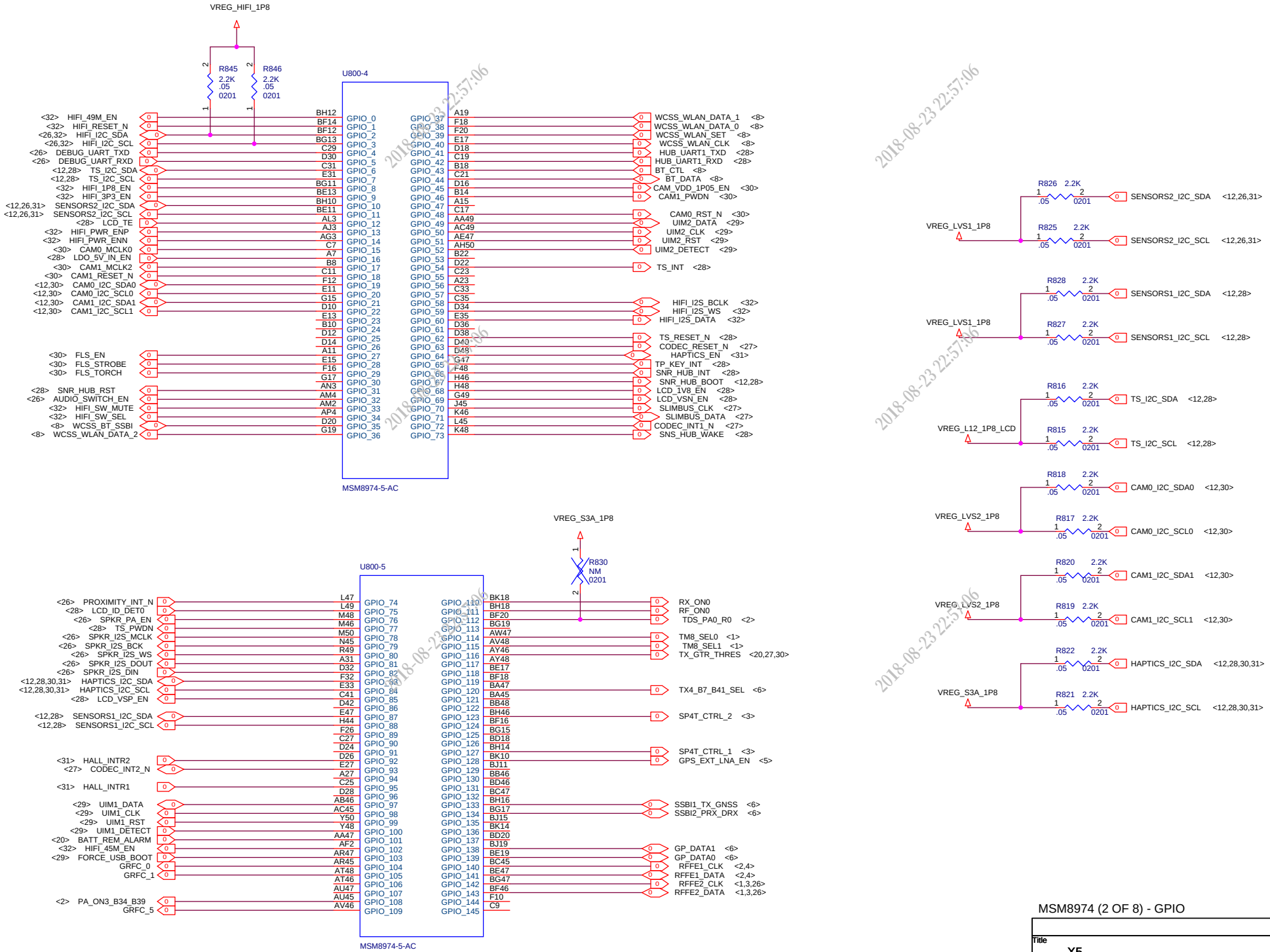

MSM8974 (2 OF 8) - GPIO

Title	X5	
Size A3	Document Number <Doc>	Rev P0
Date: Wednesday, April 08, 2015	Sheet 12 of 32	

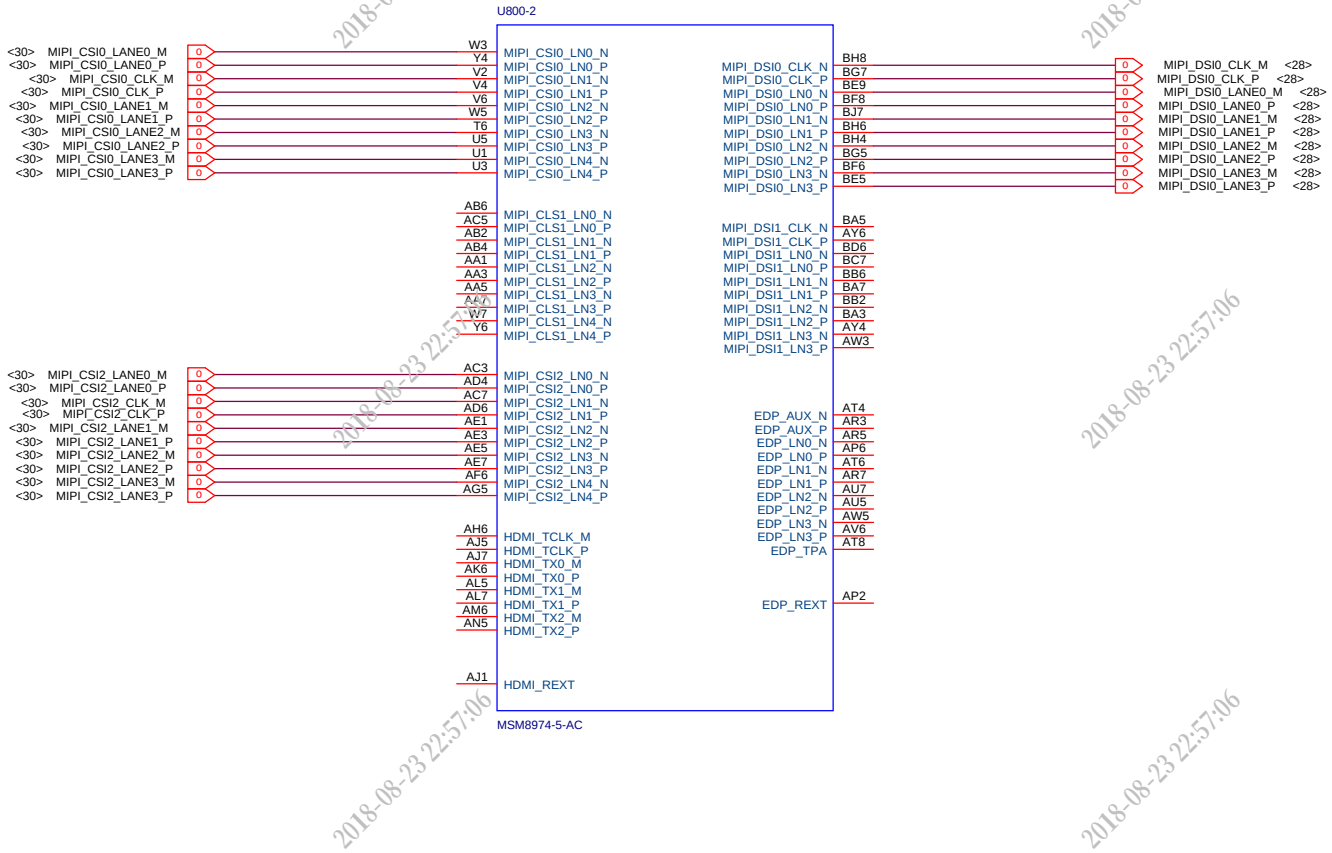

2018-08-23 22:57:06

MSM8974 (3 OF 8) - MSM8974 MIPI DSI,CSI and HDMI

Title	X5	
Size A3	Document Number <Doc>	Rev P0
Date: Wednesday, April 08, 2015	Sheet 13 of 32	

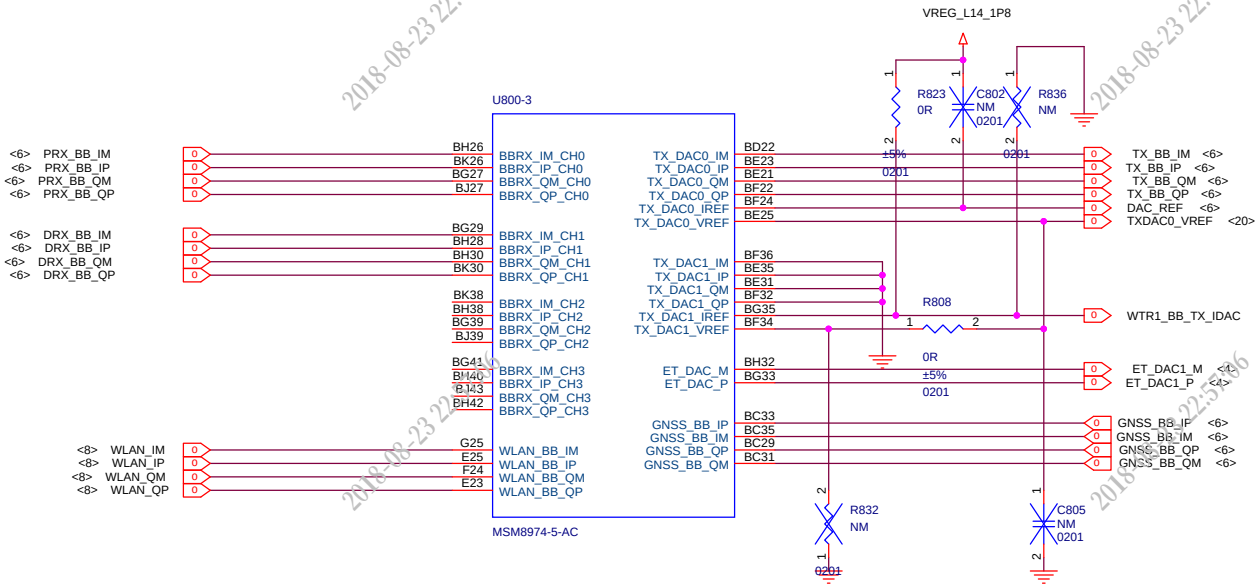

MSM8974 (4 OF 8) - MSM8974 RF INTERFACE

Title	X5	
Size A3	Document Number <Doc>	Rev P0
Date: Wednesday, April 08, 2015	Sheet 14 of 32	

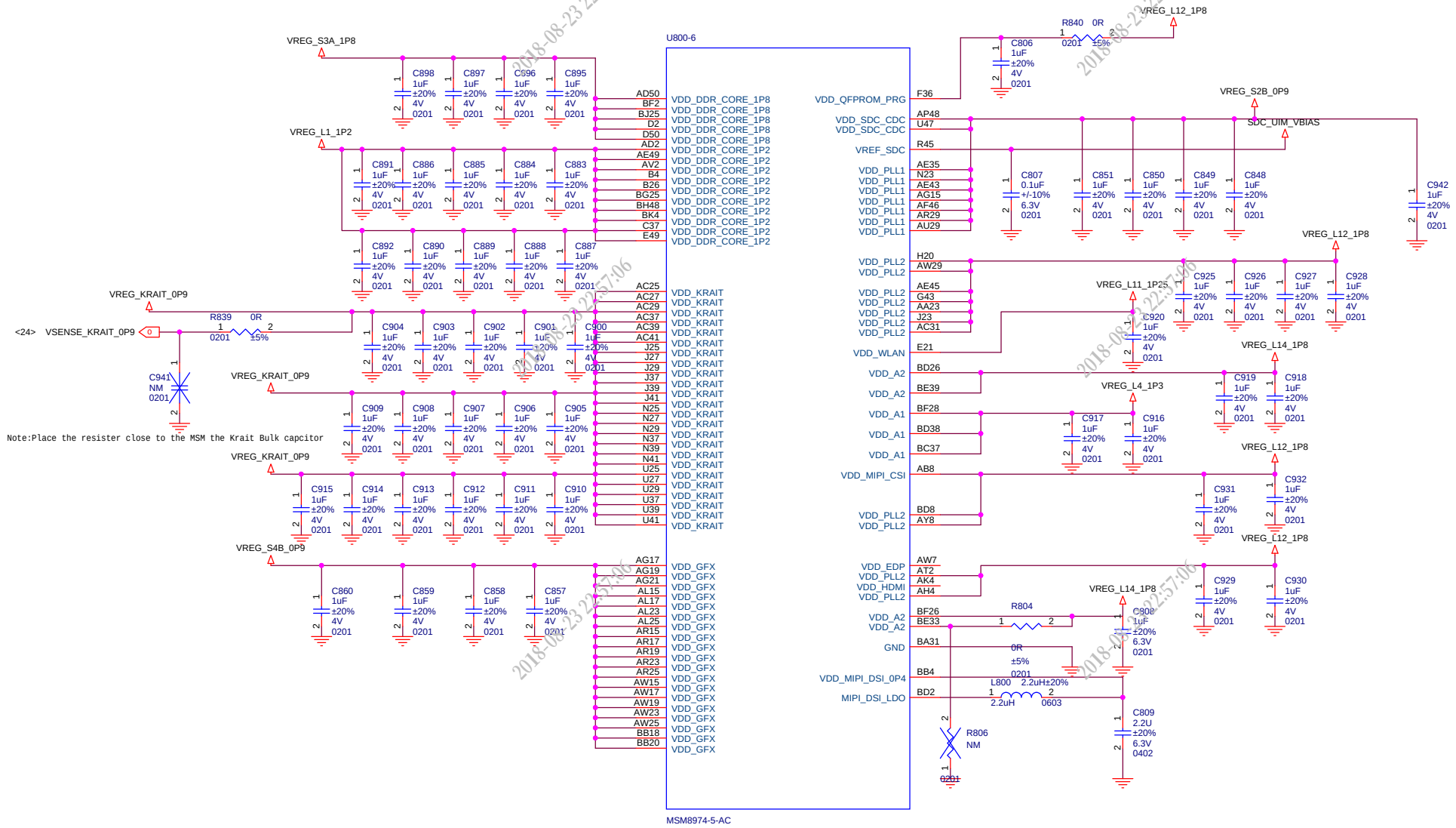

MSM8974 (5 OF 8) - MSM8974 POWER1

Title	X5	
Size A3	Document Number <Doc>	Rev P0
Date: Wednesday, April 08, 2015	Sheet 15 of 32	

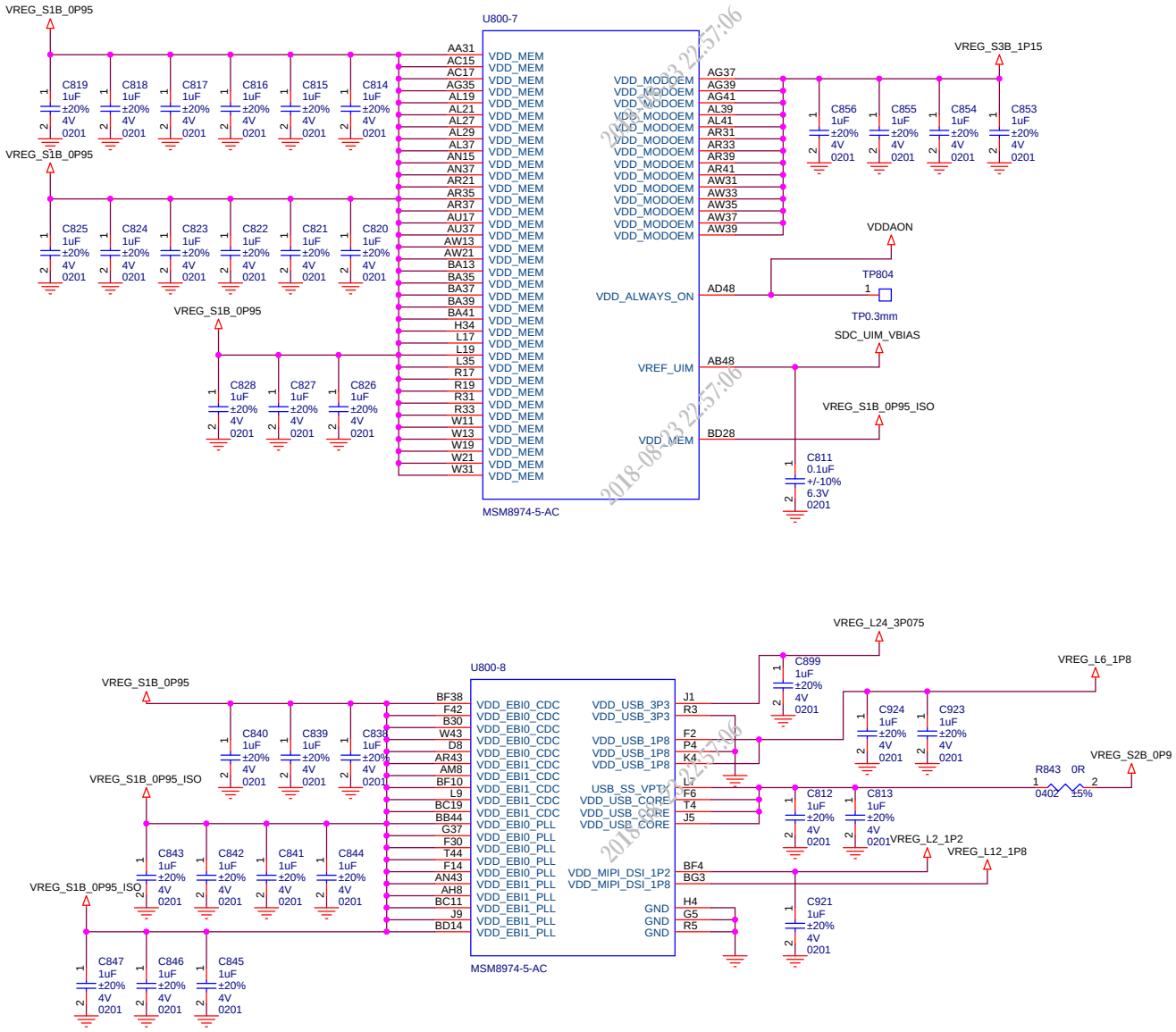

MSM8974 (6 OF 8) - MSM8974 POWER2

Title	X5	
Size A3	Document Number <Doc>	Rev P0
Date: Wednesday, April 08, 2015	Sheet 16 of 32	

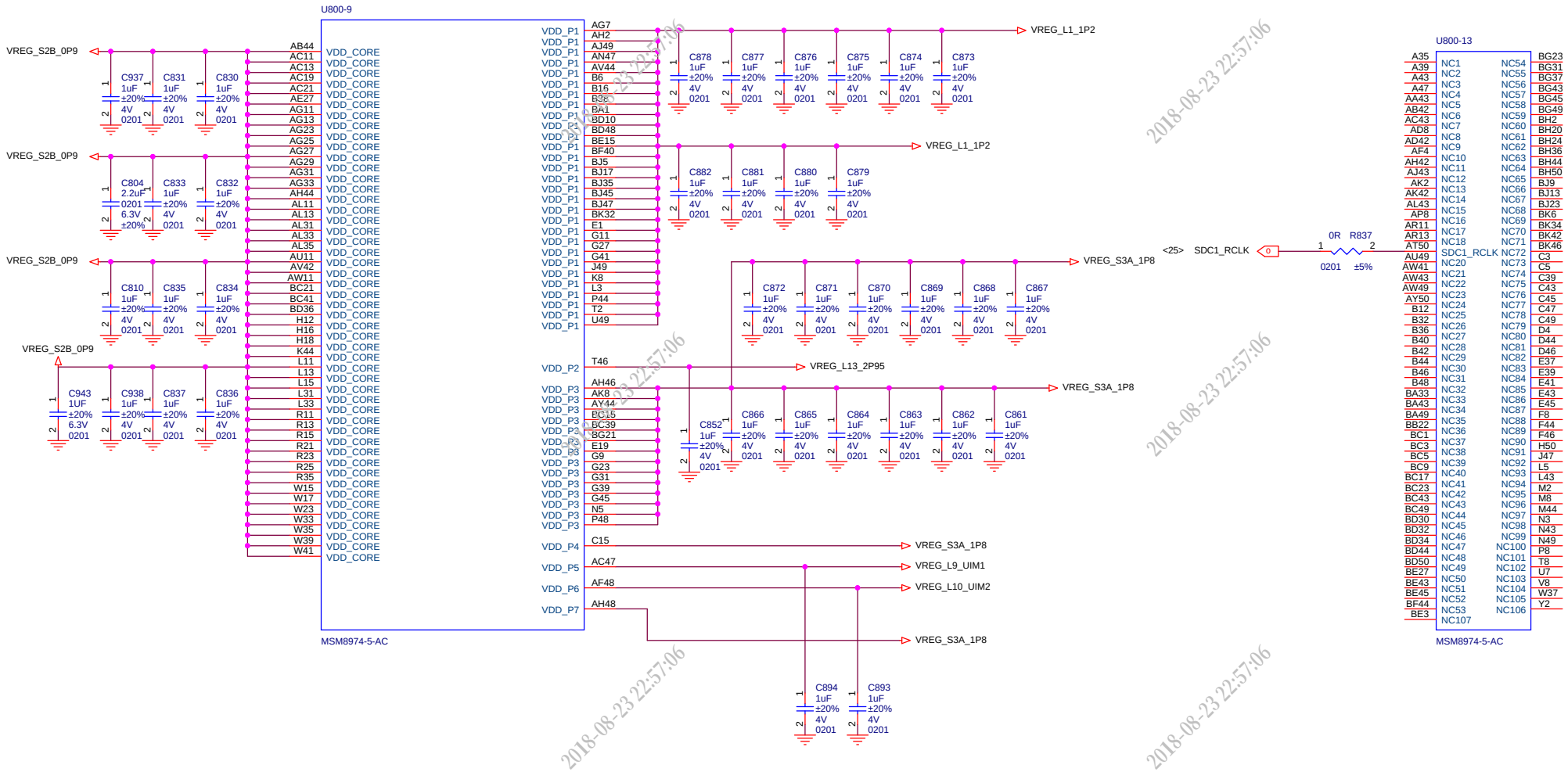

MSM8960 (6 OF 8) - MSM8974 POWER3

Title	X5	
Size A3	Document Number <Doc>	Rev P0
Date: Wednesday, April 08, 2015	Sheet 17 of 32	

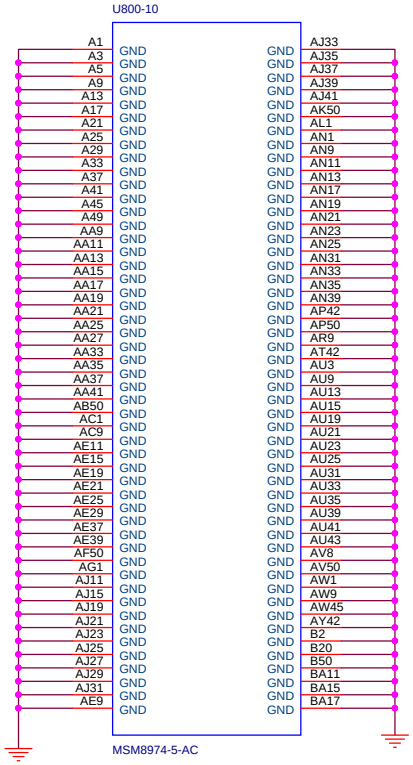

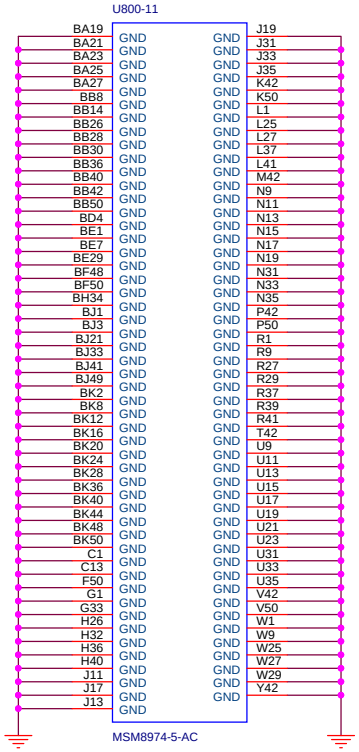

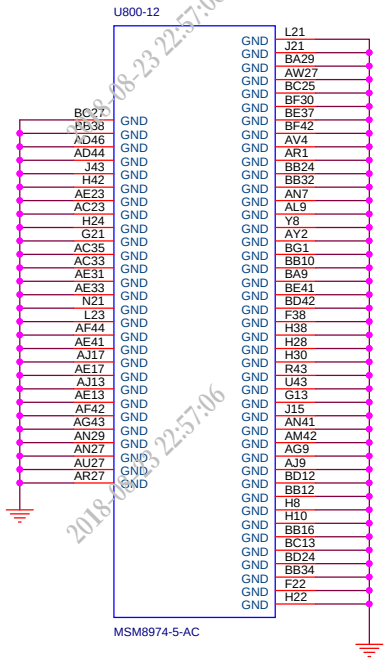

2018-08-23 22:57:06

MSM8974 (8 OF 8) - MSM8974 GND

Title	X5	
Size A3	Document Number <Doc>	Rev P0
Date: Wednesday, April 08, 2015	Sheet 18 of 32	

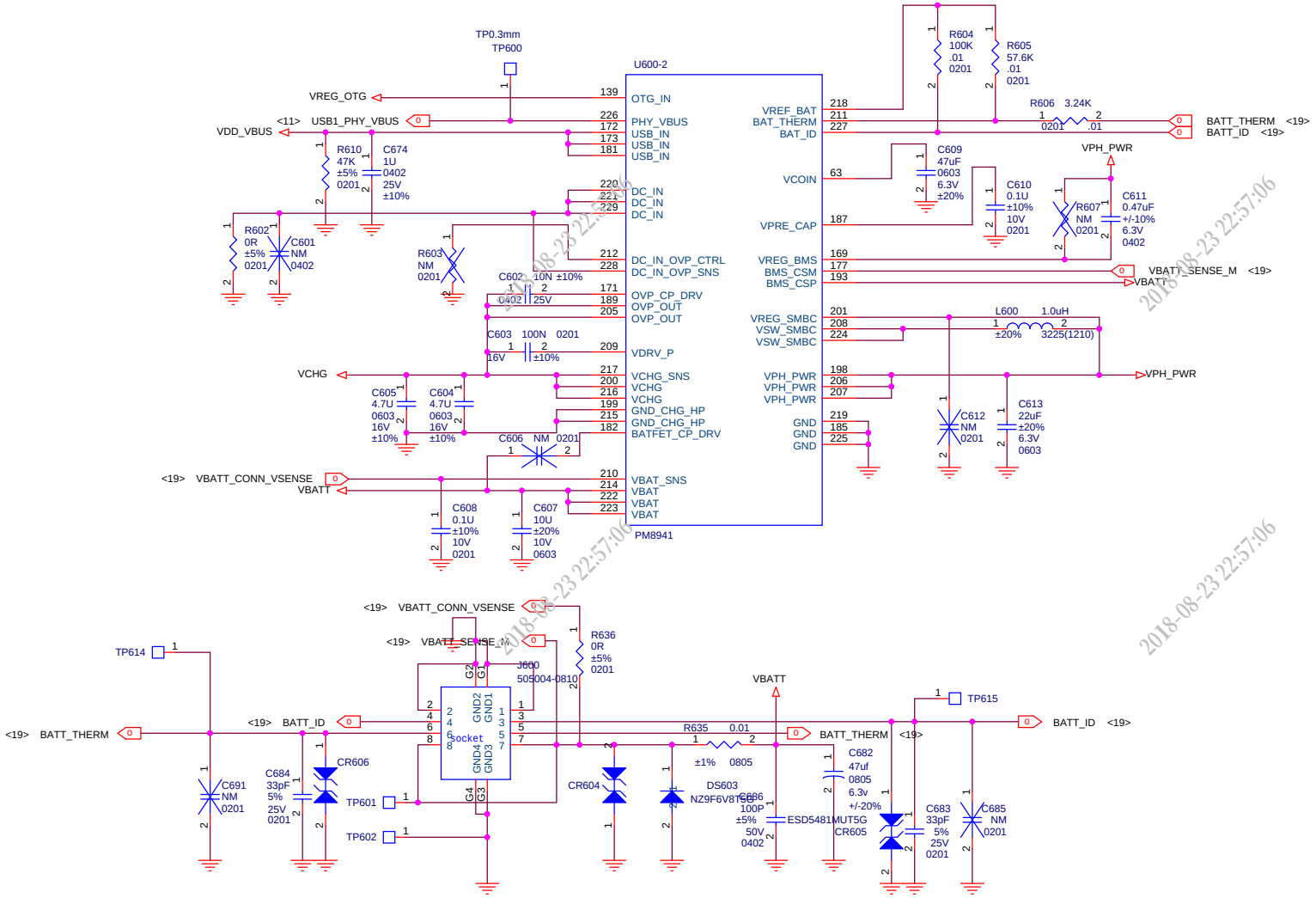

2018-08-23 22:57:06

PM8941(1 OF 5) - CHARGING

Title	X5	
Size A3	Document Number <Doc>	Rev P0
Date: Wednesday, April 08, 2015	Sheet 19 of 32	

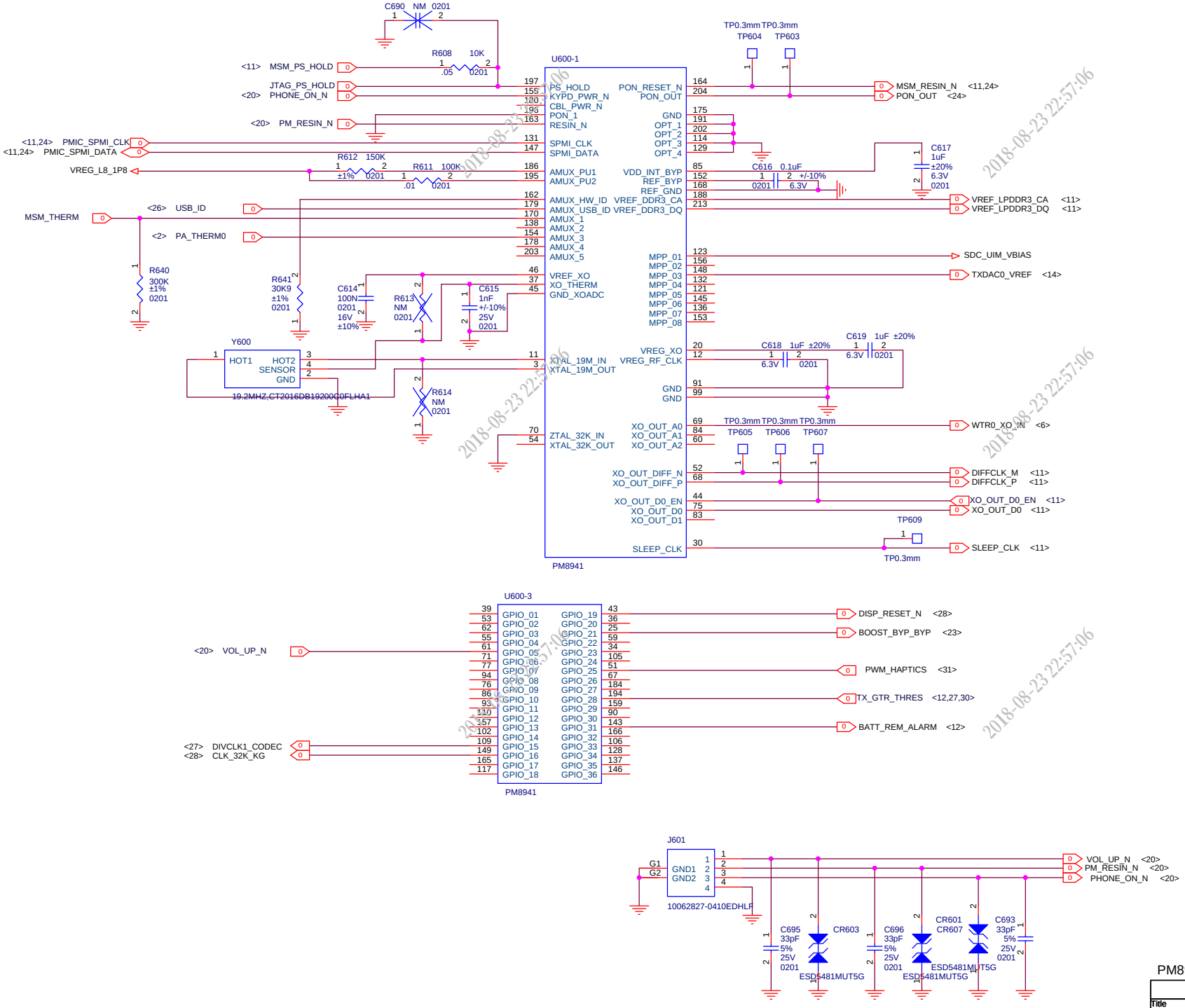

PM8941(2 OF 5)-AMUX,CLK,GPIO

Title	X5	
Size A3	Document Number <Doc>	Rev P0
Date: Wednesday, April 08, 2015	Sheet 20 of 32	

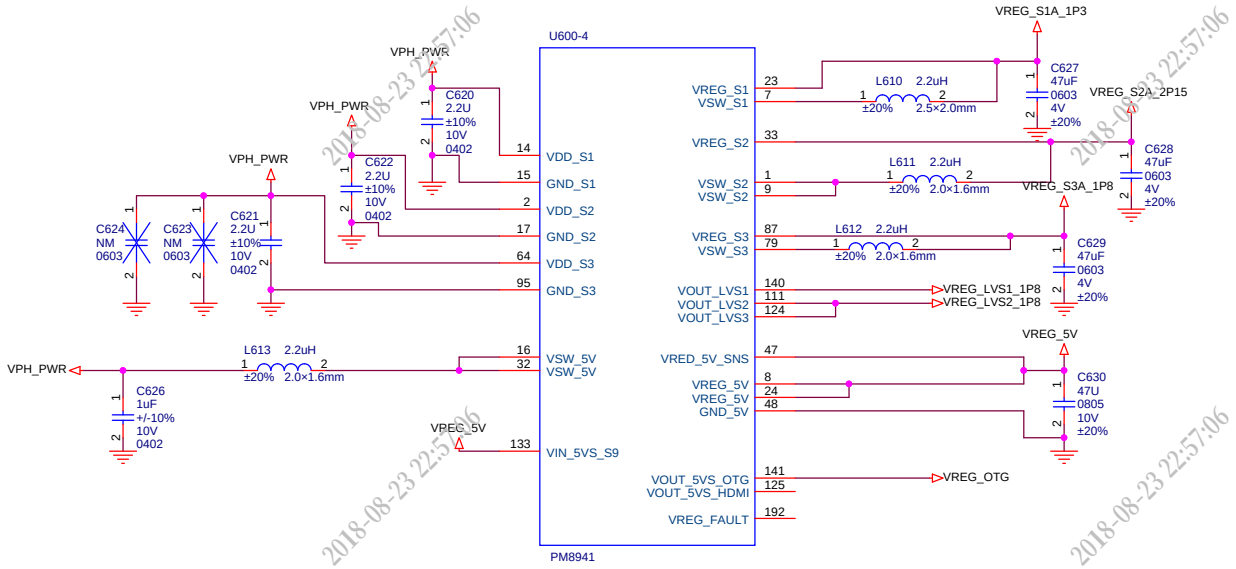

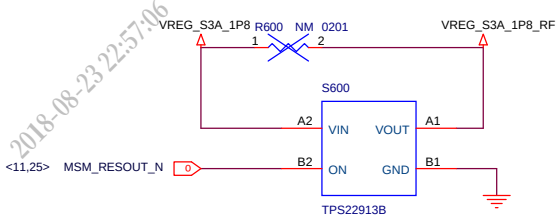

2018-08-23 22:57:06

PM8941(3 OF 5) - SMPS

Title	X5	
Size A3	Document Number <Doc>	Rev P0
Date: Wednesday, April 08, 2015	Sheet 21 of 32	

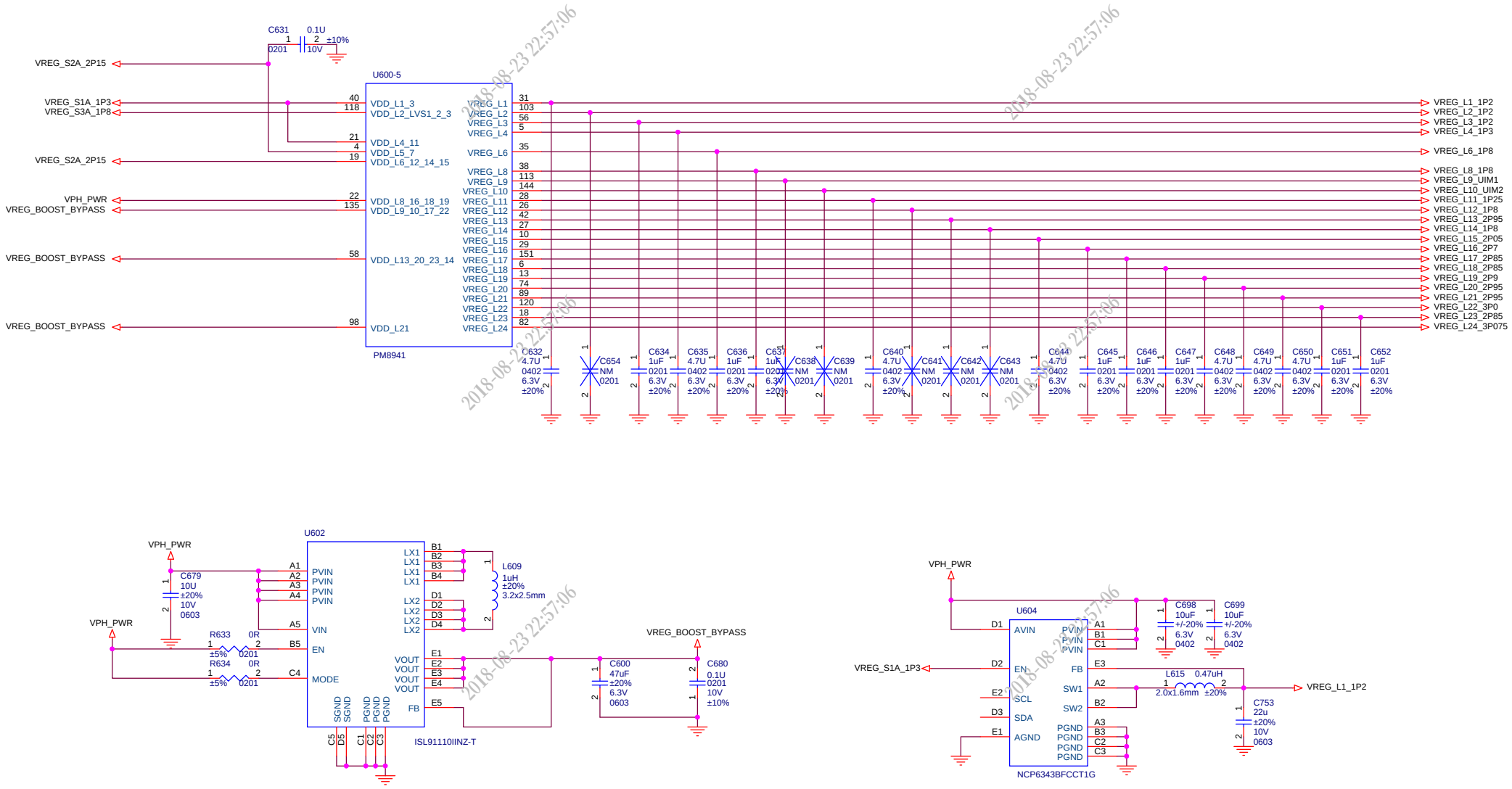

PM8941(4 OF 5) - LDO

Title	X5	
Size A3	Document Number <Doc>	Rev P0
Date: Wednesday, April 08, 2015	Sheet 22 of 32	

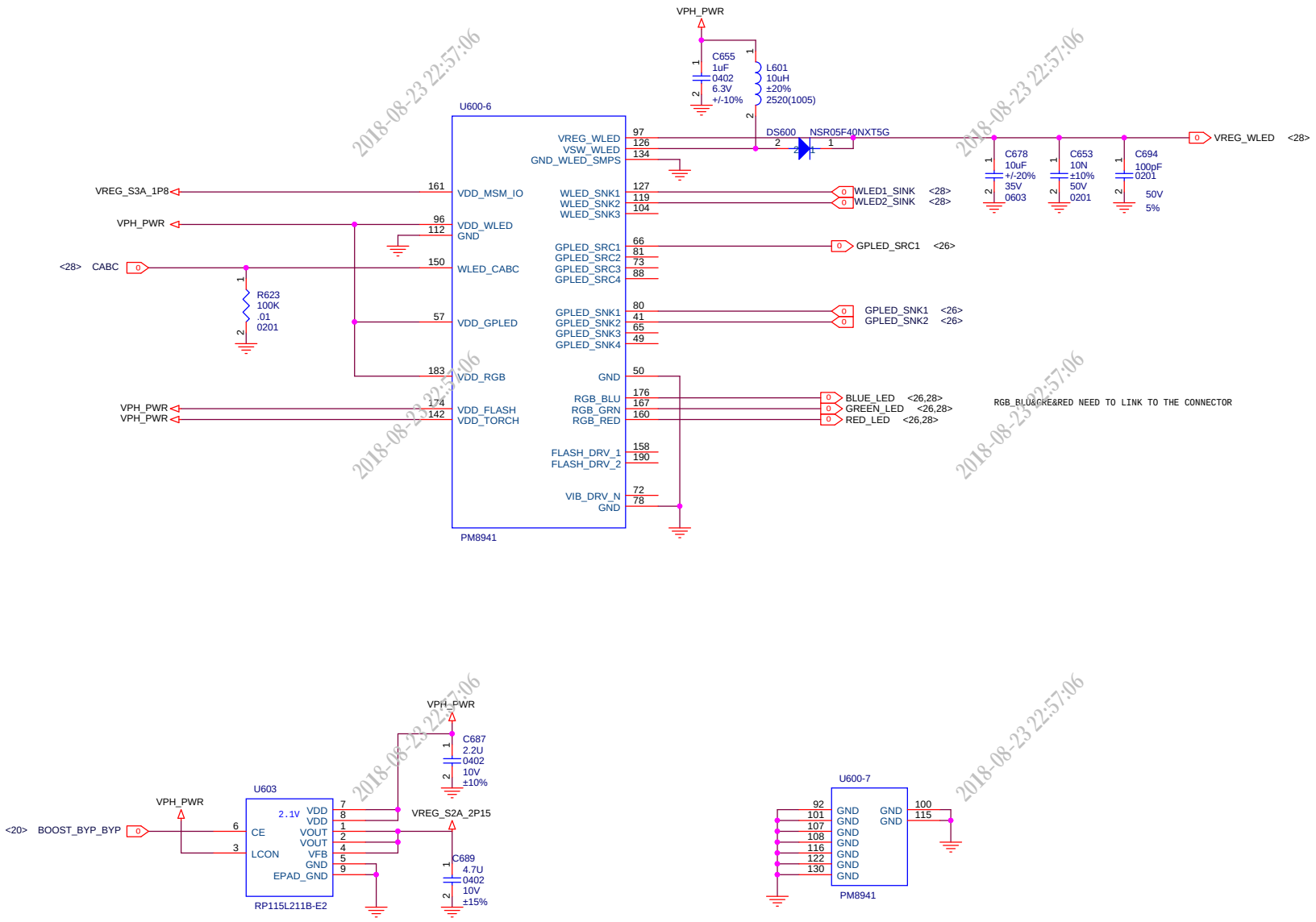

PM8941(5 OF 5) - LED&GND

Title	X5	
Size A3	Document Number <Doc>	Rev P0
Date: Wednesday, April 08, 2015	Sheet 23 of 32	

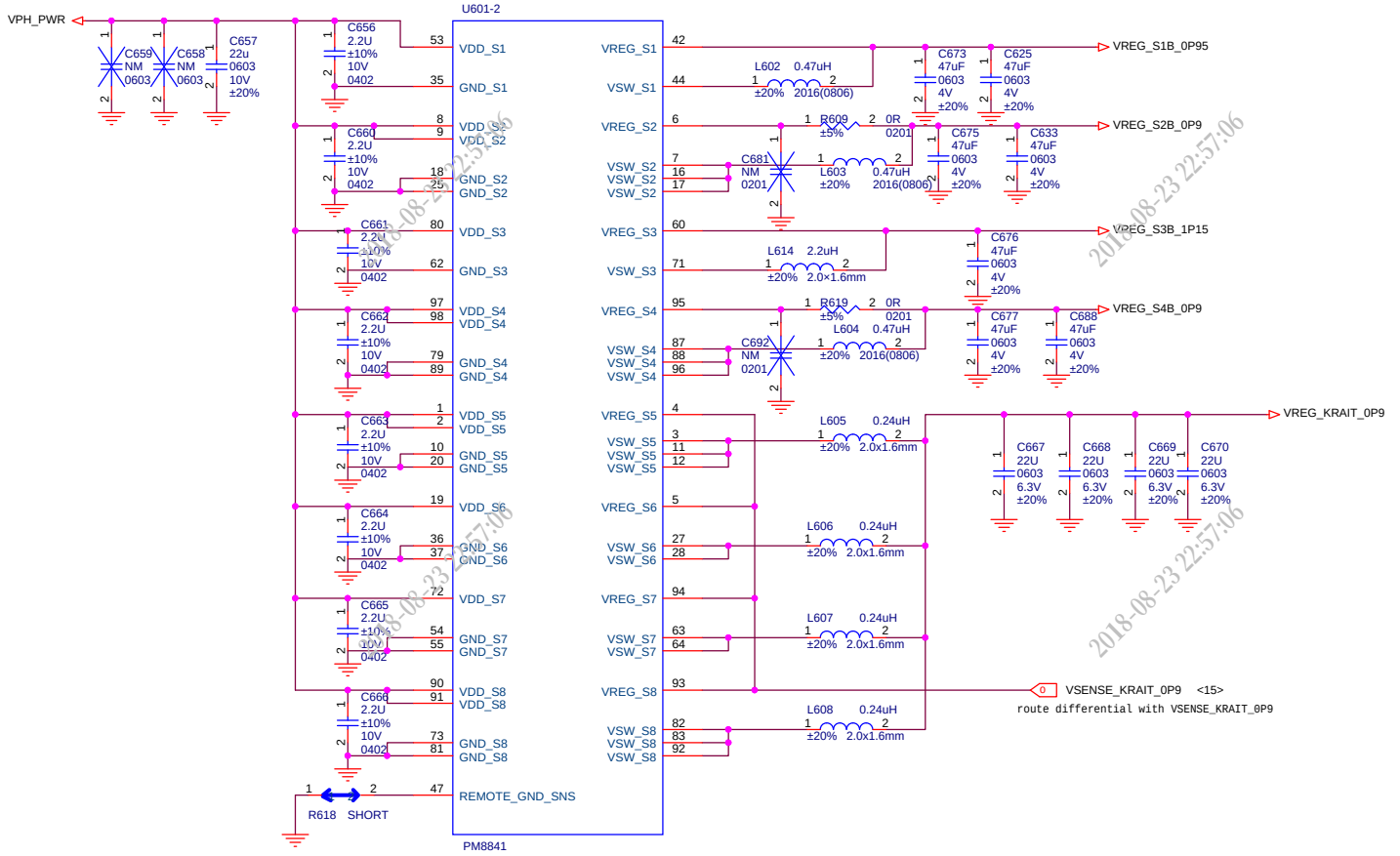

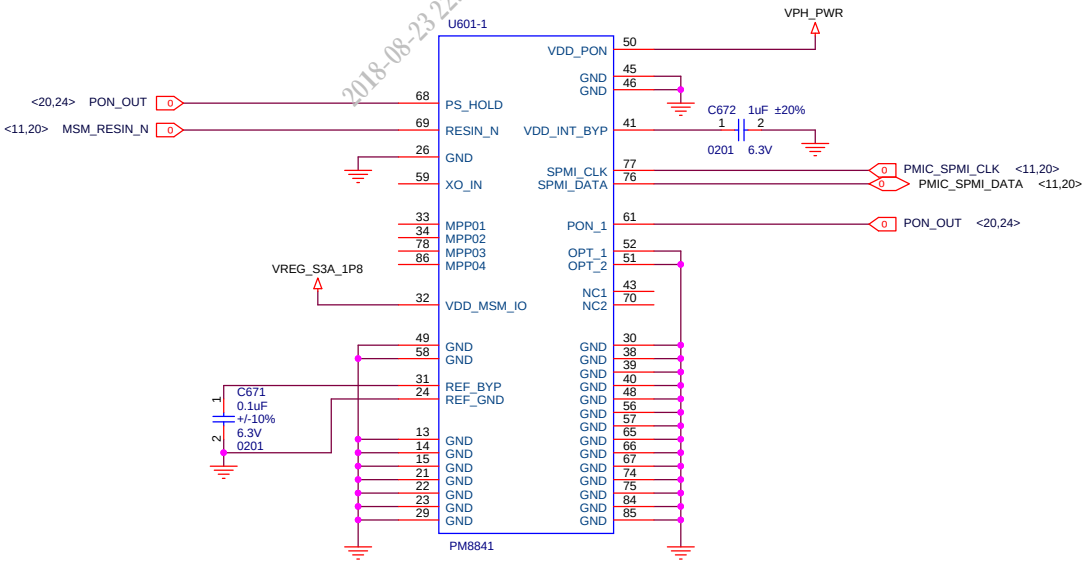

PM8841 - CONTROL AND VREG

Title	X5	
Size A3	Document Number <Doc>	Rev P0
Date: Wednesday, April 08, 2015	Sheet 24 of 32	

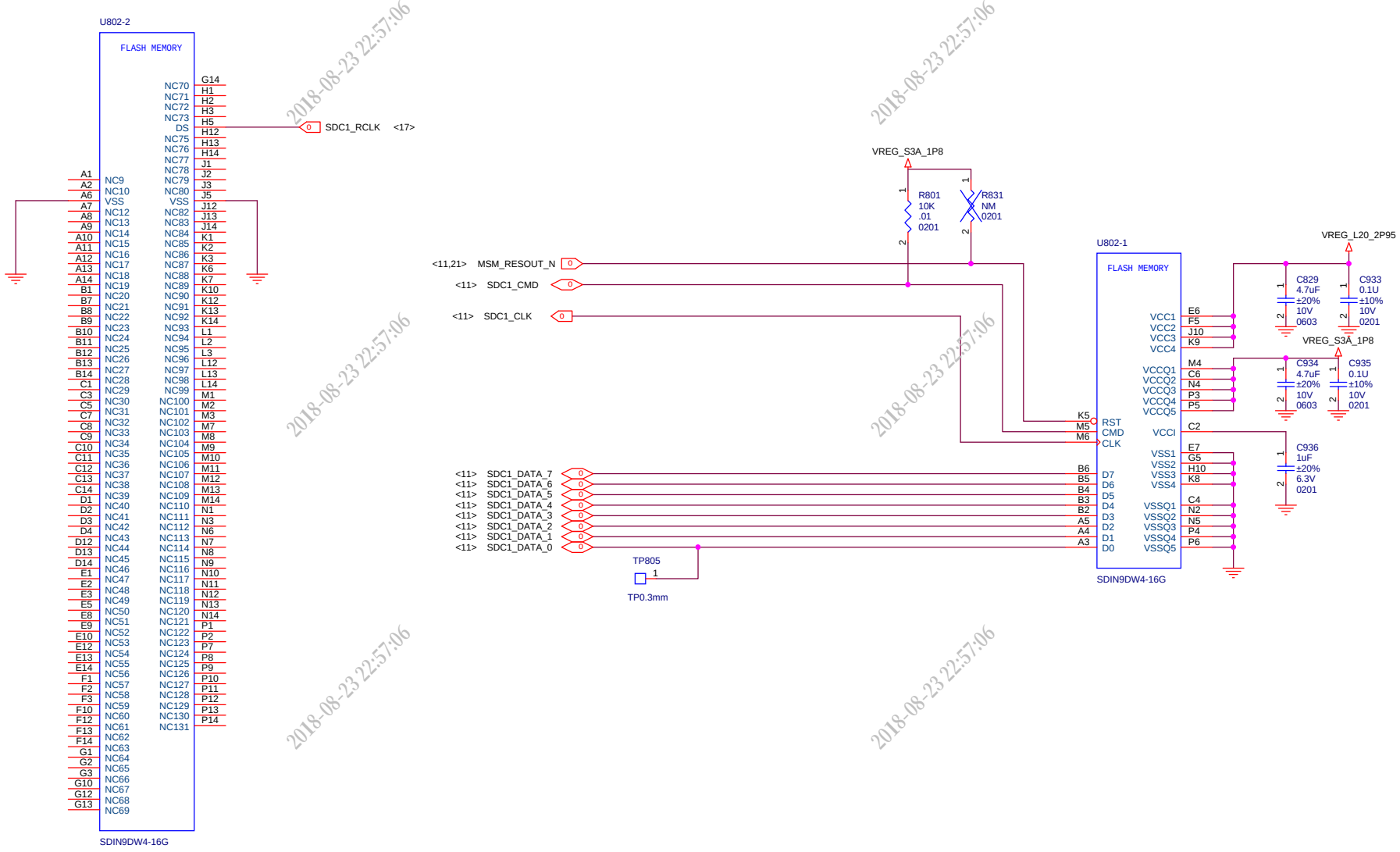

2018-08-23 22:57:06

MEMORY

Title	X5		
Size A3	Document Number <Doc>		Rev P0
Date: Wednesday, April 08, 2015		Sheet 25 of 32	

HANDSET

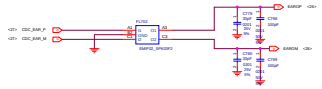

AUX Mic

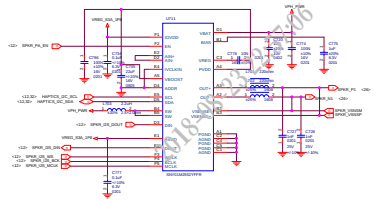

HEADSET

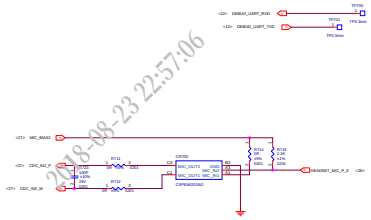

Connector

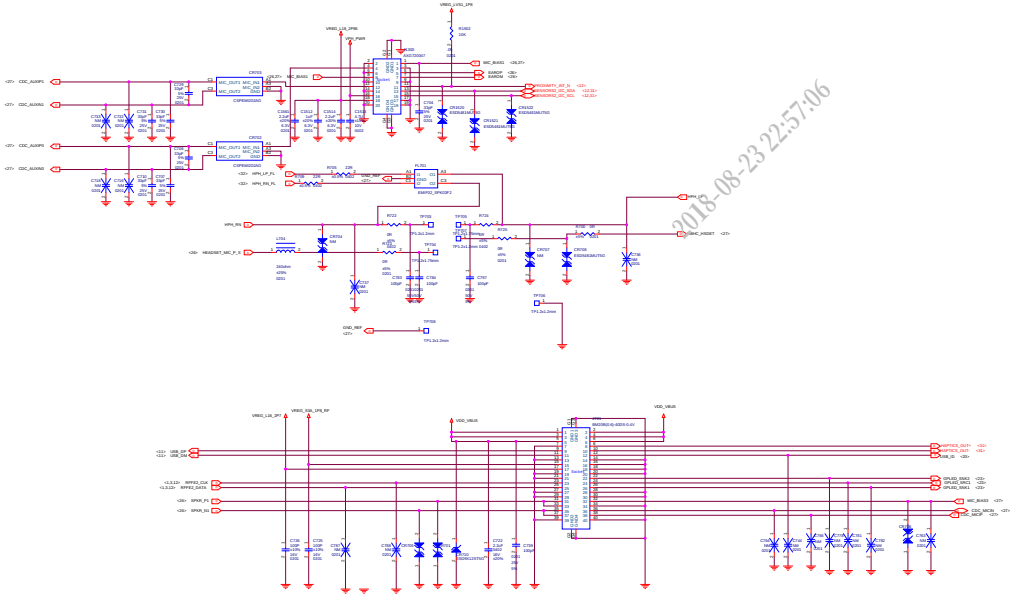

Voice Processer

2018-08-23 22:57:06

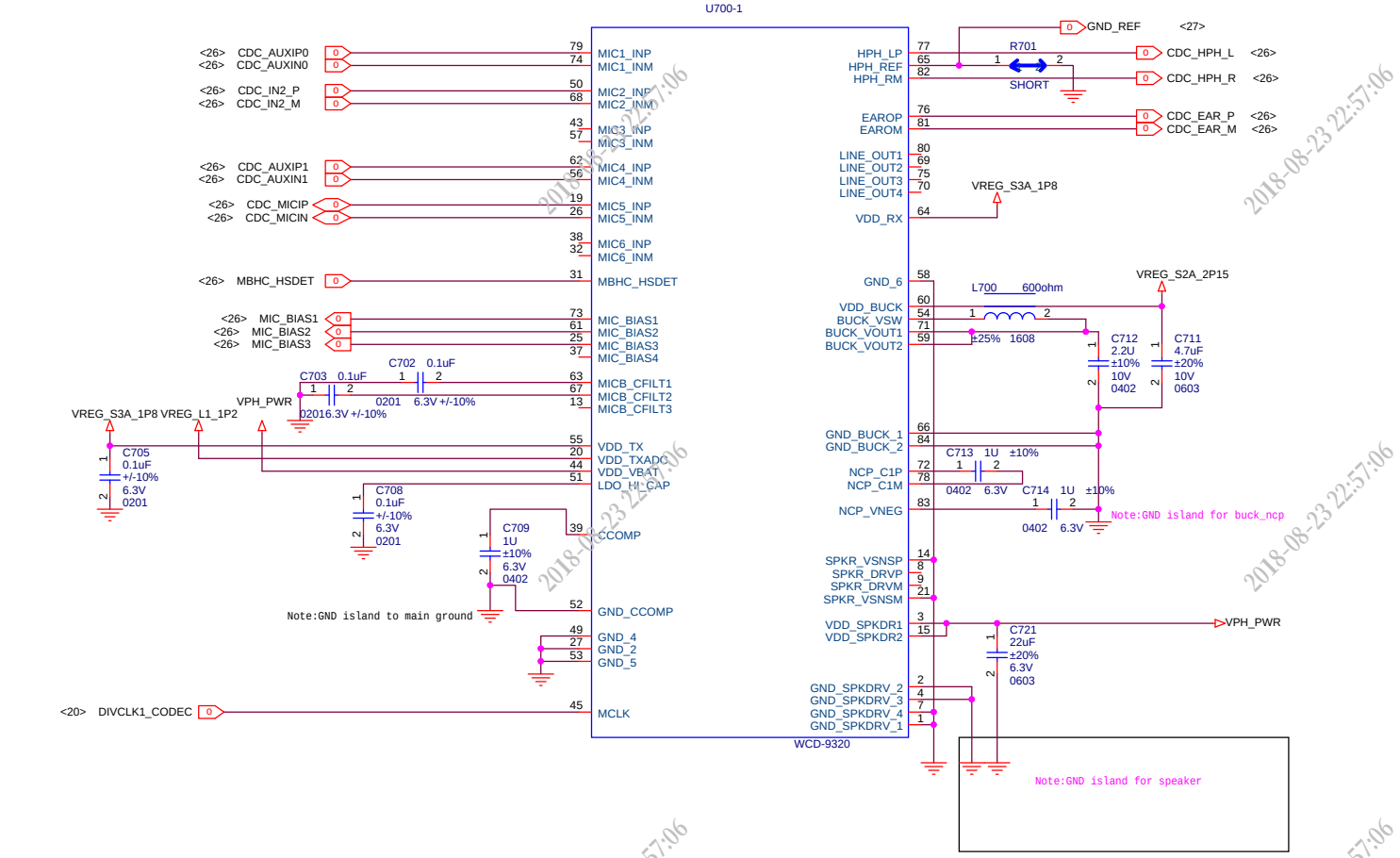

2018-08-23 22:57:06

WCD9320

Title	X5	
Size A3	Document Number <Doc>	Rev P0
Date: Wednesday, April 08, 2015	Sheet 27 of 32	

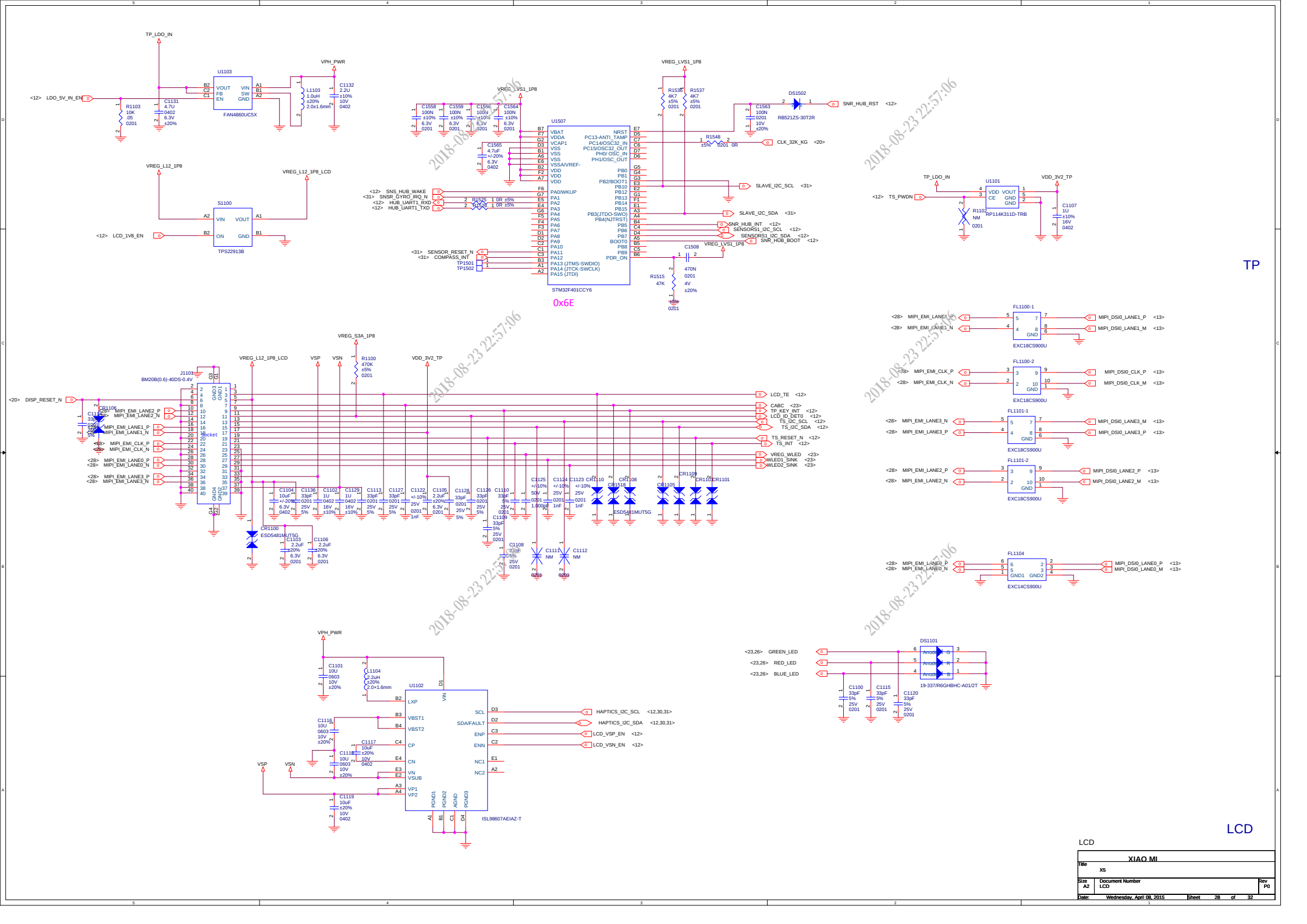
TP
LCD
U1103
FAN4860UC5X
S1100
TPS22913B
U1507
STM32F401CCY6
0x6E
U1101
DS1502
RB521ZS-30T2R
FL1100-1
FL1100-2
FL1101-1
FL1101-2
FL1104
EXC18CS900U
EXC14CS900U
J1101
BM20B(0.6)-40DS-0.4V
Socket
DS1101
19-337/R6GHBHC-A01/2T
U1102
ISL98607AEIAZ-T
2018-08-23 22:57:06

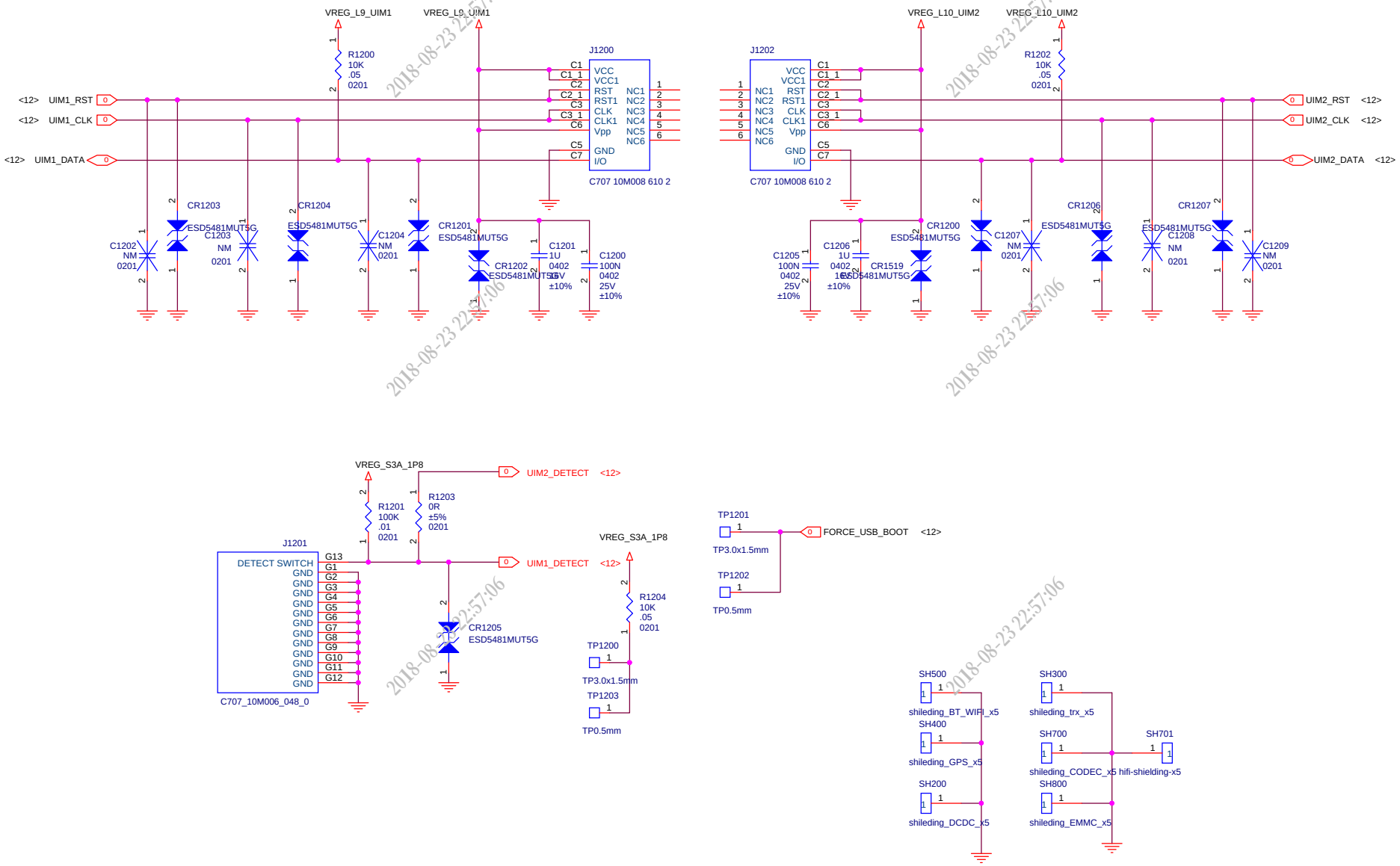

SD&SIM CONNECTOR

XIAO MI		
Title	X5	
Size A3	Document Number SD&SIM CONNECTOR	Rev P0
Date: Wednesday, April 08, 2015	Sheet 29 of 32	

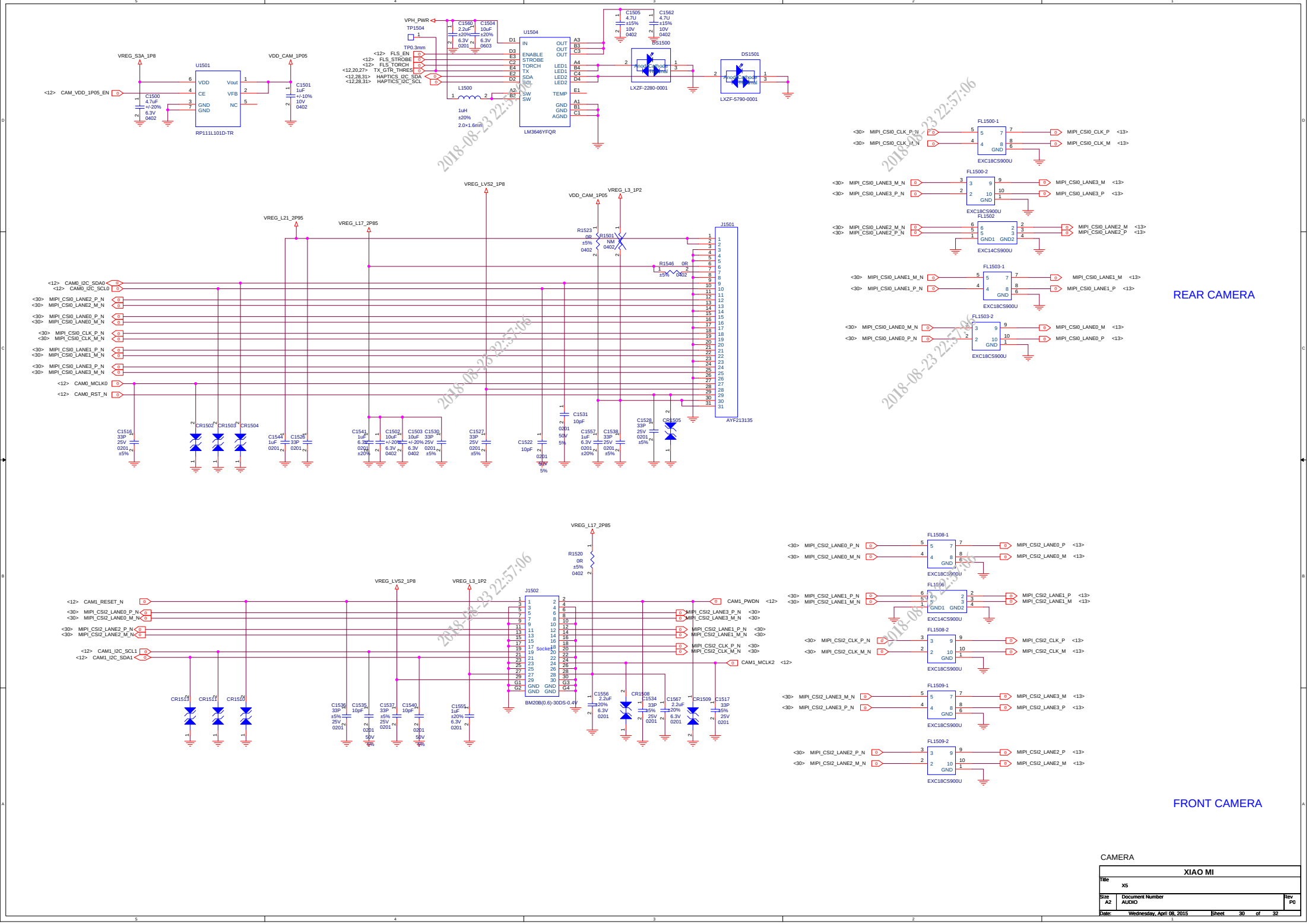

CAMERA

XIAO MI		
Title: X5		
Size: A2	Document Number: AUDIO	Rev: P0
Date: Wednesday, April 08, 2015	Sheet 30 of 32	

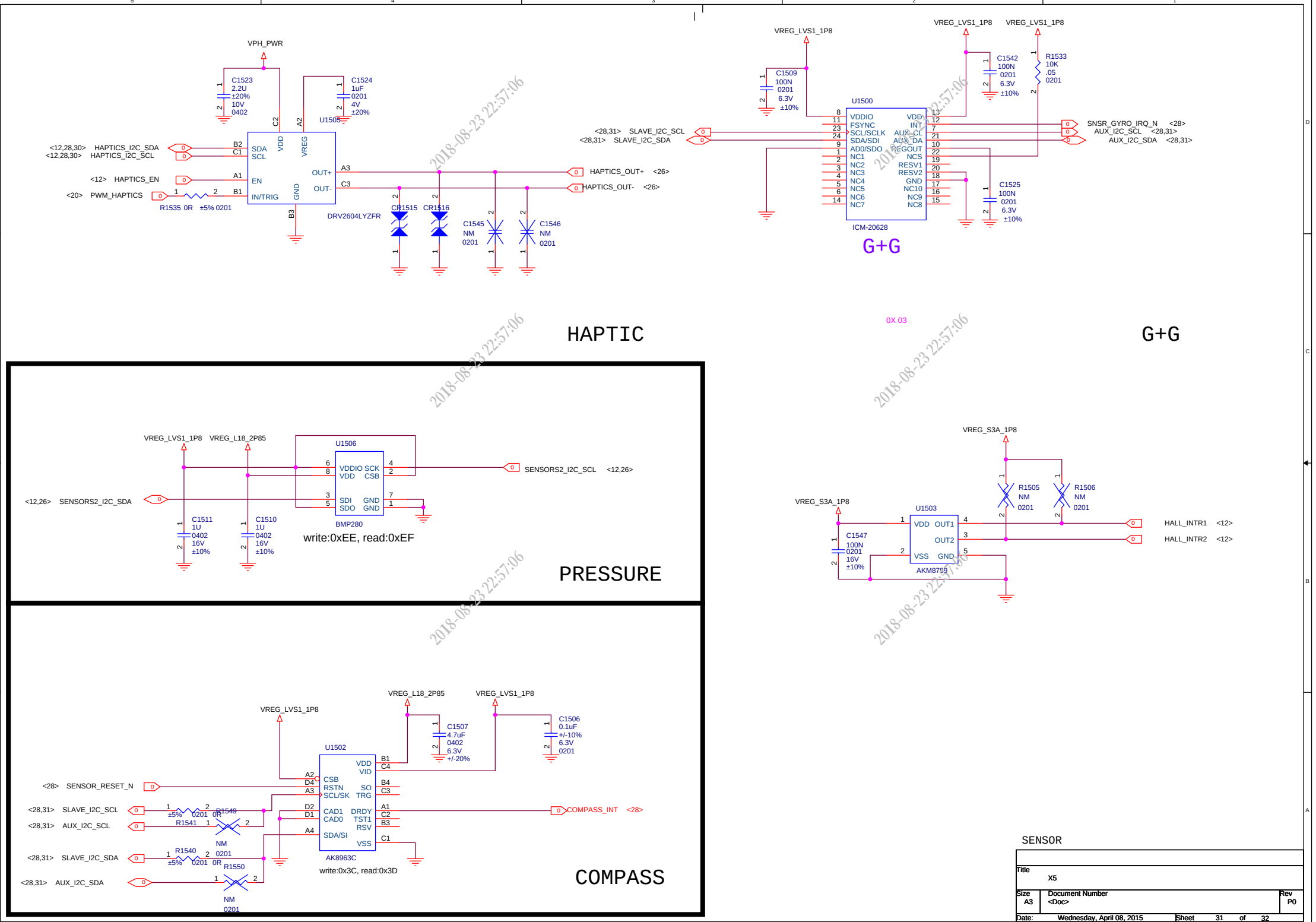

SENSOR

Title	X5	
Size A3	Document Number <Doc>	Rev P0
Date: Wednesday, April 08, 2015	Sheet 31 of 32	

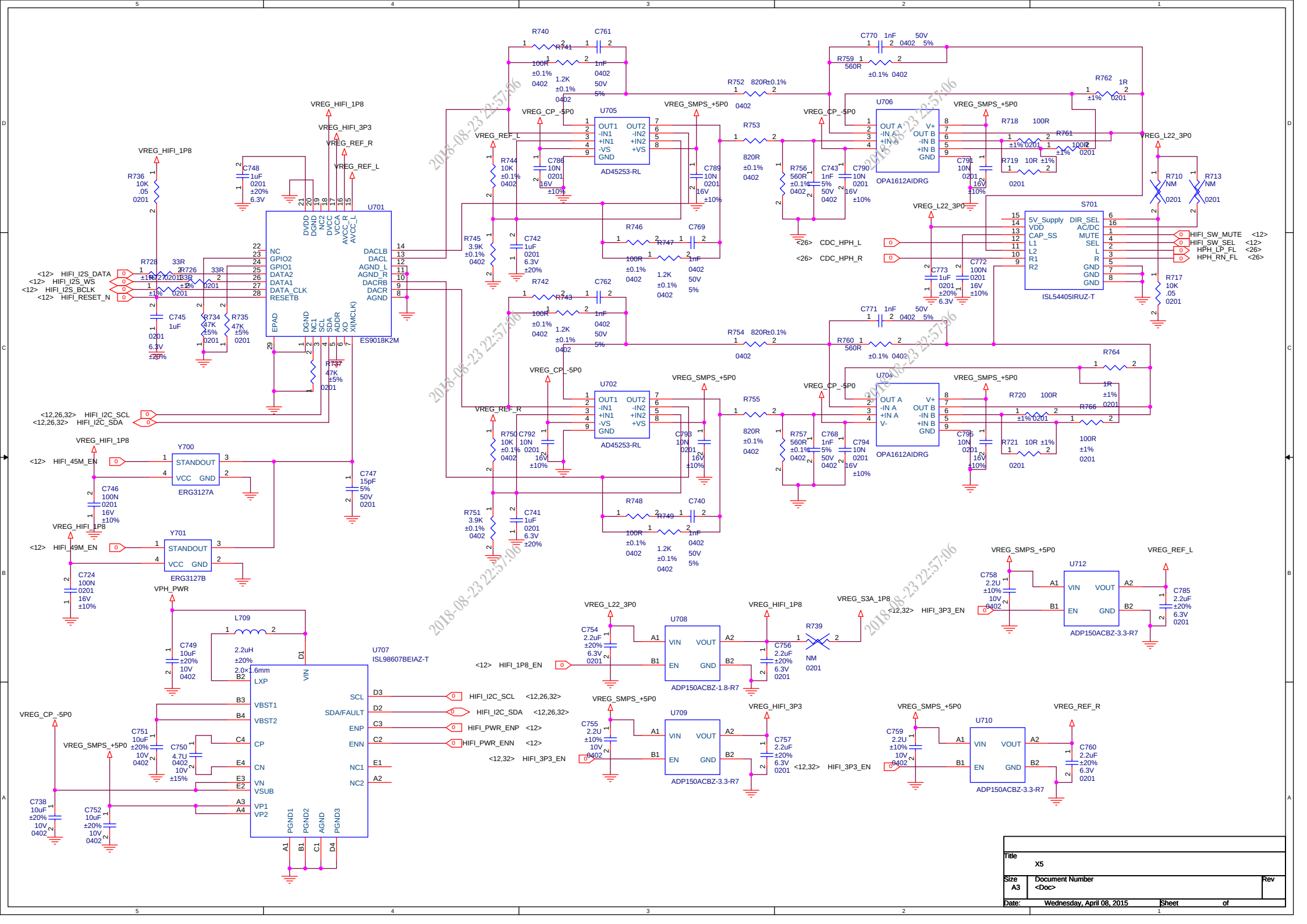

Title	X5
Size A3	Document Number <Doc>
Rev	
Date: Wednesday, April 08, 2015	Sheet of